PRODUCED BY THE OPERATIONS DIRECTORATE OF ENERGY NETWORKS ASSOCIATION

ANNEX 3

Engineering Recommendation G59

Issue 3 Amendment ~~2~~ 3 ~~September 2015~~February 2018

RECOMMENDATIONS FOR THE CONNECTION OF GENERATING PLANT TO THE DISTRIBUTION SYSTEMS OF LICENSED DISTRIBUTION NETWORK OPERATORS

www.energynetworks.org

PUBLISHING AND COPYRIGHT INFORMATION

© 2015 Energy Networks Association

All rights reserved. No part of this publication may be reproduced, stored in a retrieval system or transmitted in any form or by any means, electronic, mechanical, photocopying, recording or otherwise, without the prior written consent of Energy Networks Association. Specific enquiries concerning this document should be addressed to:

Operations Directorate
Energy Networks Association
6th Floor, Dean Bradley House
52 Horseferry Rd
London
SW1P 2AF

This document has been prepared for use by members of the Energy Networks Association to take account of the conditions which apply to them. Advice should be taken from an appropriately qualified engineer on the suitability of this document for any other purpose.

First published, June 1985

Amendments since publication

Issue	Date	Amendment
G59/1	1991	Revised incorporating Amendment 1 (1992) and Amendment 2 (1995)
G59/2	Aug 2010	Revised - replaced two previous Engineering Recommendations, ER G59/1 and its associated Engineering Technical Report ETR 113, and ER G75/1.
G59/2-1	March 2011	Revised Amendment 1 – Appendix A13.1 - Change to DC injection current limits
G59/3	Sept 2011	Major revision to the document to align with G83/2 and to cater for type tested equipment upto 50kW. Other areas revised included: • *Connection application and commissioning procedures* • *Connection and Commissioning Procedure for Power Stations above EREC G83/2 limits but less than 50kW or 17kW per phase using Type Tested Generating Units only* • *Connection and Commissioning Procedure for Power Stations above 50kW which use Type Tested Generating Units only* • *Voltage Unbalance* • *Generation capacity for single and split phase supplies* • *Generating Unit performance requirements for Type Tested Units* • *Over and Under Voltage Stability Tests* • *Frequency Drift and Step Change Stability Test.* • *Protection Settings* • *Revised Forms* • *Simplified application form*

G59/3	Nov 2013	Correction of error. The error relates to the British Standard which is to be used to determine the 'flicker' contribution from small wind turbines. References to this standard are found at 9.6.2.1 and 13.8.5.5 of ER G59/3. The standard that should be referred to is BS EN 61400-12. However, the standard that was referred BS EN 61400-21was incorrect. Therefore, to correct this error, the two references (i.e. at 9.6.2.1 and 13.8.5.5) have been changed and the description of the standard corrected at 3.2 (page 9) of ER G59/3. This will now read: ***BS EN 61400-12-1:2006*** *Wind turbines. Power performance measurements of electricity producing wind turbines.*
G59/3-1	Aug 2014	Revised RoCoF settings in Section 10.5.7
G59/3-2	Sept 2015	Revocation of Section 12.4 (f) – It is no longer a requirement to undertake an additional functional check of the LoM protection by removing one phase of the supply to the Generating Unit. Revision to section 12.3.1 (g) to include the provision of two options to carry out a functional test confirming that the Interface Protection has operated. Testing of RoCoF elements in Appendix 13.3. A discrepancy has been corrected between the wording contained in Section 12.4 and the testing requirements contained in Appendix 13.3 on how to undertake the test . Section 13.8.3.2 is repeated on page 130. Change to 13.8.3.3 and revise subsequent numbering.
G59/3-3	~~Mar 2018~~Feb 2018	Modifications to prevent the use of vector shift protection on all new installations from 01/0~~3~~2/2018, and setting out the requirements for RoCoF settings, again for installations commissioned on or after [01/0~~3~~2/2018]. Consequential changes to the following clauses. Foreword; 2.10; ~~;~~10.3.12-14; 10.5.1 ; 10.5.2 ; 10.5.7; 10.5.8 ; 12.4.1 ; 13.1~~;~~ ; 13.3; 13.7.1; 13.7.3 ; 13.11 (13.11 deleted)

Formatted: Font: (Default) Arial

Contents

Foreword 6
1 Purpose 7
2 Scope 7
3 Normative references 9
4 Terms and definitions 11
5 Legal Aspects 16
6 Connection Application 18
6.1 General 18
6.2 Application for Connection 20
6.3 System Analysis for Connection Design 21
7 CONNECTION ARRANGEMENTS 23
7.1 Operating Modes 23
7.2 Long-Term Parallel Operation 23
7.3 Infrequent Short-Term Parallel Operation 23
7.4 Switched Alternative-Only Operation 25
7.4.1 General 25
7.4.2 Changeover Operated at HV 26
7.4.3 Changeover Operated at LV 26
7.5 Balance of Generating Unit output at LV 27
7.6 Generation Unit capacity for single and split LV phase supplies 27
7.7 Voltage Management Units in Customer's premises 28
8 EARTHING 29
8.1 General 29
8.2 HV Generating Plant 29
8.3 LV Generating Plant 34
9 NETWORK CONNECTION DESIGN AND OPERATION 40
9.1 General Criteria 40
9.2 Network Connection Design for Generating Plant 40
9.3 Generating Plant Performance and Control Requirements 42
9.4 Fault Contributions and Switchgear Considerations 44
9.5 Voltage Limits and Control 46
9.6 Power Quality 47
9.7 System Stability 50
9.8 Island Mode 51
10 PROTECTION 53
10.1 General 53
10.2 Protection Requirements 53
10.3 Loss of Mains (LoM) 54
10.4 Additional DNO Protection 58
10.5 Protection Settings 60
10.6 Typical Protection Application Diagrams 69

Formatted: Right

11 INSTALLATION, OPERATION AND CONTROL INTERFACE 77
11.1 General 77
11.2 Isolation and Safety Labelling 78
11.3 Site Responsibility Schedule 79
11.4 Operational and Safety Aspects 80
11.5 Synchronizing and Operational Control 81
12 TESTING AND COMMISSIONING 82
12.1 General 82
12.2 Procedures and Witnessing Requirements 82
12.3 Commissioning Tests / Checks required at all Power Stations 83
12.4 Additional Commissioning requirements for Non Type Tested Generating Units 84
12.5 Periodic Testing 86
12.6 Changes at the Installation 86
13 APPENDICES 87
13.1 Generating Unit Type Test Sheet 89
13.2 Generating Plant Installation and Commissioning Confirmation 103
13.3 Generating Plant Installation and Commissioning Tests 106
13.4 Generating Plant Decommissioning Confirmation 116
13.5 Application for connection of Type Tested Generating Units with total aggregate Power Station capacity <50kW 3 phase or 17kW single phase. 117
13.6 Additional Information Relating to System Stability Studies 119
13.7 Loss of Mains (LoM) Protection Analysis 122
13.8 Type Testing of Generation Units of 50kW three phase, or 17kW per phase or less. Guidance for Manufacturers. 132
13.8.5 Separate Specific Technology Requirements 142
13.8.5.1(C1.1) Domestic CHP 142
13.8.5.2(C1.2) Photovoltaic 142
13.8.5.3(C1.3) Fuel Cells 142
13.8.5.4(C1.4) Hydro 142
13.8.5.5(C1.5) Wind 143
13.8.5.6(C1.6) Energy Storage Device 143
13.9 Main Statutory and other Obligations 144
13.10 Example calculations to determine if unequal generation across different phases is acceptable or not. 148
13.11 Guidance on Risk Assessment when using RoCoF LoM Protection for Power Stations in the 5MW to 50MW range 150

Foreword

This Engineering Recommendation (EREC) is published by the Energy Networks Association (ENA) and comes into effect from September 2015. It has been prepared and approved for publication under the authority of the Great Britain Distribution Code Review Panel.The approved abbreviated title of this engineering document is “EREC G59”, which replaces the previously used abbreviation “ER G59”.

The current update, G59/3-3, deals with type-tested and non-type-tested generation slightly differently. See clause 2.10.

Formatted: Right

1 Purpose

1.1 The purpose of this Engineering Recommendation (EREC) is to provide guidance on the connection of **Generating Plant** to the **Distribution Systems** of licensed **Distribution Network Operators (DNOs)**. It is intended to address all aspects of the connection process from standards of functionality to site commissioning, such that **Customers, Manufacturers** and **Generators** are aware of the requirements that will be made by the local **DNO** before the **Generating Plant** will be accepted for connection to the **Distribution System**. This Engineering Recommendation replaces Engineering Recommendations G59/3, ~~and~~ G59/3-1 and G59/3-2.

1.2 The guidance given is designed to facilitate the connection of **Generating Plant** whilst maintaining the integrity of the **Distribution System**, both in terms of safety and supply quality. It applies to all **Generating Plant** within the scope of Section 2, irrespective of the type of electrical machine and equipment used to convert any primary energy source into electrical energy.

1.3 This EREC is intended to provide guidance to **Generator**s and **DNO**s. The mandatory requirements governing the connection of Distributed **Generating Plant** are generally set out in the Distribution Planning and Connection Code 7 (DPC7) of the **Distribution Code** and in the Connection Conditions (CC) of the **Grid Code**. In the event of any conflict with this EREC, the provisions of the **Distribution Code** and **Grid Code** will prevail.

2 Scope

2.1 This EREC provides guidance on the technical requirements for the connection of **Generating Plant** to the **Distribution System**s of licensed **DNO**s. For the purposes of this EREC, a **Generating Plant** is any source of electrical energy, irrespective of the prime mover and **Generating Unit** type. This EREC applies to all **Generating Plant** which is not in the scope of EREC G83 or is not compliant with EREC G83 requirements.[1] EREC G59 describes a simplified connection procedure for connection of a **Type Tested single Generating Unit** of less than 17kW per phase or 50kW three phase, or the connection of multiple **Type Tested Generating Units** with a maximum aggregate capacity of less than 17kW per phase or 50kW three phase, per **Customer** installation, provided that any existing connected **Generating Units** are also **Type Tested**.

2.2 This EREC does not provide advice for the design, specification, protection or operation of **Generating Plant** itself. These matters are for the owners of plant to determine.

---

[1] Engineering Recommendation EREC G83/~~2~~ – Recommendations for the connection of small-scale embedded generators (up to and including 16 A per phase) in parallel with public low-voltage distribution networks. This Engineering Recommendation provides guidance on the technical requirements for the connection of **Generating Units** rated up to and including 16 A per phase, single or multi-phase, 230/400 Volts AC. The recommendations cover the connection of **Generating Units**, either single or multi-phase within a single Customer's installation up to the limit of 16A per phase, and multiple **Generating Unit**s in a close geographic region with a limit of 16A per phase in each customer installation, under a planned programme of work.

2.3 Specific separate requirements apply to **Generating Plant** comprising **Generating Unit**s less than or equal to 16A per phase and these are covered in EREC G83. However, **Generating Unit**s ≤16A per phase that have not been **Type Tested** in accordance with EREC G83 or whose technology type is not covered by one of the EREC G83 annexes should comply with the requirements set in this document. Section 6 of this document provides more guidance on how to apply this document to **Generating Unit**s that are below the 16A threshold but do not meet the requirements of EREC G83~~/2~~.

2.4 The connection of mobile generation owned by the **DNO**, EREC G83~~/2~~ compliant **Generating Unit**s or offshore **Transmission System**s containing generation are outside the scope of this Engineering Recommendation.

2.5 This document applies to systems where the **Generating Plant** can be paralleled with a **Distribution System** or where either the **Generating Plant** or a **Distribution System** with **Generating Plant** connected can be used as an alternative source of energy to supply the same electrical load.

2.6 The generic requirements for all types of **Generating Plant** within the scope of this document relate to the connection design requirements, connection application and notification process including confirmation of commissioning. The document does not attempt to describe in detail the overall process of connection from application, through agreement, construction and commissioning. It is recommended that the ENA publications entitled – "*Distributed Generation Connection Guides*" ~~is~~ are consulted for more general guidance.

2.7 **Medium and Large Power Station**s are, in addition to the general requirements of this EREC, bound by the requirements of the **Grid Code**. In the case of **Large Power Station**s, the **Grid Code** will generally apply in full. For **Medium Power Station**s, only a subset of the **Grid Code** applies directly, and the relevant clauses are listed in DPC7 of the **Distribution Code**.

2.8 This EREC is written principally from the point of view of the requirements in Great Britain. There are some differences in the requirements in Great Britain and Northern Ireland, which are reflected in the separate Grid Codes for Great Britain and Northern Ireland, and the separate Distribution Code for Northern Ireland. These documents should be consulted where necessary, noting that the numbering of sections within these documents is not necessarily the same as in the **Distribution Code** for Great Britain and the **Grid Code** for Great Britain.

2.9 The separate synchronous network operating in the Shetland Isles has specific technical challenges which are different to those of the Great Britain synchronous network. This EREC is not in itself sufficient to deal with these issues

2.10 G59/3-3 (ie this version of G59) has been updated to remove vector shift as an allowed loss of mains (LoM) technique and to apply new settings for RoCoF protection. These strictures apply to non-type-tested generation only, ie to the LoM protection relays. The requirements for type-tested generation remain unchanged at this time, given that LoM techniques are not specified in G59. Type-tested equipment will be addressed as a separate exercise in the near future, and will result in further changes to G59 in this regard.

Formatted: Right

3 Normative references

The following referenced documents, in whole or part, are indispensable for the application of this document. For dated references, only the edition cited applies. For undated references, the latest edition of the referenced document (including any amendments) applies.

3.1 Statutory Requirements

Health and Safety at Work etc Act (HASWA): 1974

The Health and Safety at Work etc Act 1974 also referred to as HASAW or HSW, is the primary piece of legislation covering occupational health and safety in the United Kingdom. The Health and Safety Executive is responsible for enforcing the Act and a number of other Acts and Statutory Instruments relevant to the working environment.

Electricity Safety, Quality and Continuity Regulations (ESQCR): 2002

The Electricity Safety, Quality and Continuity Regulations 2002 (Amended 2006) - Statutory Instrument Number 2665 -HMSO ISBN 0-11-042920-6 abbreviated to ESQCR in this document.

Electricity at Work Regulations (EaWR): 1989

The Electricity at Work regulations 1989 abbreviated to EaWR in this document.

3.2 Standards publications

BS 7671: 2008 Requirements for Electrical Installations

IEE Wiring Regulations: Seventeenth Edition.

BS 7430: 1999

Code of Practice for Earthing.

BS 7354

Code of Practice for Design of Open Terminal Stations.

BS EN 61000 series*

Electromagnetic Compatibility (EMC).

BS EN 61508 series*

Functional safety of electrical/ electronic/ programmable electronic safety-related systems.

BS EN 60255 series*

Measuring relays and protection equipment.

BS EN 61810 series*

Electromechanical Elementary Relays.

BS EN 60947 series*

Low Voltage Switchgear and Controlgear.

BS EN 60044-1: 1999

Instrument Transformers. Current Transformers.

BS EN 60034-4:2008

Methods for determining synchronous machine quantities from tests.

BS EN 61400-12-1:2006

Wind turbines. Power performance measurements of electricity producing wind turbines.

IEC 60909 series*

Short-circuit currents in three-phase a.c. systems. Calculation of currents.

IEC TS 61000-6-5: 2001

Electromagnetic Immunity Part 6.5 Generic Standards. Immunity for Power Station and Substation Environments.

IEC 60364-7-712: 2002

Electrical installations of buildings – Special installations or locations – Solar photovoltaic (PV) power supply systems.

ENA Engineering Recommendation G5

Planning levels for harmonic voltage distortion and the connection of non-linear equipment to transmission and distribution networks in the United Kingdom.

ENA Engineering Recommendation G74

Procedure to meet the requirements of IEC 909 for the calculation of short-circuit currents in three-phase AC power systems.

ENA Engineering Recommendation G83

Recommendations for connection of small-scale embedded Generators (up to 16 A per phase) in parallel with public low voltage distribution networks.

ENA Engineering Recommendation P2

Security of Supply.

Formatted: Right

ENA Engineering Recommendation P18

Complexity of 132kV circuits.

ENA Engineering Recommendation P28

Planning limits for voltage fluctuations caused by industrial, commercial and domestic equipment in the United Kingdom.

ENA Engineering Recommendation P29

Planning limits for voltage unbalance in the UK for 132 kV and below.

ENA Technical Specification 41-24

Guidelines for the design, installation, testing and maintenance of main earthing systems in substations.

ENA Engineering Technical Report ETR 124

Guidelines for actively managing power flows associated with the connection of a single distributed generation plant.

ENA Engineering Technical report ETR 126

Guidelines for actively managing voltage levels associated with the connection of a single distributed generation plant.

ENA Engineering Technical report ETR 130

The application guide for assessing the capacity of networks containing distributed generation.

* ***Where standards have more than one part, the requirements of all such parts shall be satisfied, so far as they are applicable.***

4 Terms and definitions

For the purposes of this document, the following terms and definitions apply.

Note: Except where otherwise stated, the terms defined in this section shall have the same meaning as in the Grid Code and the Distribution Code.

Act

The Electricity Act 1989 (as amended.including by the Utilities Act 2000 and the Energy Act 2004).

Authority

The Gas and Electricity Markets Authority established under Section 1 of the Utilities Act 2000 The Gas and Electricity Markets Authority established under Section 1 of the Utilities Act 2000.

Connection Agreement

An agreement between the **DNO** and the **User** or any **Customer** setting out the terms relating to a connection with the **DNO**s **Distribution System**.

Connection Point

An **Entry Point** or an **Exit Point** of the **Distribution System** as the case may be.

Customer

A person who is the owner or occupier of premises that are connected to the **Distribution System**.

Customer's Installation

The electrical installation on the **Customer**'s side of the supply terminals together with any equipment permanently connected or intended to be permanently connected thereto.

Distribution Code

A code required to be prepared by a **DNO** pursuant to Standard Licence Condition 21 (**Distribution Code**) of a **Distribution Licence** and approved by the **Authority** as revised from time to time with the approval of, or by the direction of, the **Authority**.

Distribution Licence

A distribution licence granted under Section 6(1)(c) of the **Act**.

Distribution System

An electricity **Distribution System** operated by a holder of a **Distribution Licence**.

Distribution Network Operator (DNO)

The person or legal entity named in Part 1 of the **Distribution Licence** and any permitted legal assigns or successors in title of the named party.

Entry Point

The point at which an **Embedded Generator** or other **User**s connect to the **DNO'**s **Distribution System** where power flows into the **DNO'**s **Distribution System** under normal circumstances.

Embedded Generator

A **Generator** including a **Customer** with own generation whose **Generating Unit** is/are connected to the **DNO's Distribution System** or to another authorised distributor connected to the **DNO's Distribution System**.

Exit Point

The point of supply from the **DNO'**s **Distribution System** to a **User** where power flows out from the **DNO'**s **Distribution System** under normal circumstances.

Formatted: Right

Generator

A person who generates electricity under licence or exemption under the Electricity Act 1989 (as amended by the Utilities Act 2000 and the Energy Act 2004) or the Electricity (Northern Ireland) Order 1992 and whose **Generating Plant** is directly or indirectly connected to a **Distribution System**. For avoidance of doubt, also covers any competent person or agent working on behalf of the **Generator**. Often referred to as a distributed or **Embedded Generator**. Also for the avoidance of doubt any **Customer** with generation connected to that Customer's Installation is a **Generator**.

Generating Plant

A **Power Station** including any **Generating Unit** therein.

Generating Unit

Any apparatus which produces electricity.

Grid Code

The code which the **NETSO** is required to prepare under its **Transmission Licence** and have approved by the **Authority** as from time to time revised with the approval of, or by the direction of, the **Authority**.

High Voltage (HV)

A voltage exceeding 1000V AC or 1500V DC between conductors, or 600V AC or 900V DC between conductors and earth.

Installer

A person who carries out the installation of **Generating Unit(**s**)** on behalf of a **Generator** and who carries out some of the functions required of a **Generator** during the installation and commissioning phases of a **Power Station**.

Interface Protection

The electrical protection required to ensure that any **Generating Unit** is disconnected for any event that could impair the integrity or degrade the safety of the **Distribution System.** The interface protection is typically not all installed at the interface between the **DNO** and **Customer**s network.

Large Power Station

As defined in the **Distribution Code**.

Low Voltage (LV)

A voltage normally exceeding extra-low voltage (50V) but not exceeding 1000V AC or 1500V DC between conductors or 600V AC or 900V DC between conductors and earth.

Manufacturer

A person or organisation that manufactures **Generating Units** which can be **Type Tested** to meet the requirements of this Engineering Recommendation if it is of a suitable size

Medium Power Station

As defined in the **Distribution Code**.

National Electricity Transmission System Operator (NETSO)

National Grid Electricity Transmission (NGET) in its capacity as operator of the National Transmission System.

Point of Common Coupling

The point on a **Distribution System,** electrically nearest the **Customer**'s Installation**,** at which other **Customer**s are, or may be, connected.

Point of Supply

The point of electrical connection between the apparatus owned by the **DNO** and the **Customer**.

Power Station

Generating Units (even where sited separately), which are owned and/or controlled by the same **Generator** and may reasonably be considered as being managed as one **Power Station.** For the purpose of this document a single **Generating Unit** will also be described as a **Power Station**.

Power System Stabiliser (PSS)

Equipment controlling the output of a **Generating Unit** in such a way that power oscillations of the machine are damped. Input variables may be speed, frequency, or power or a combination of variables.

Small Power Station

As defined in the **Distribution Code**.

Step Voltage Change

Following system switching, a fault or a planned outage, the change from the initial voltage level to the resulting voltage level after all the **Generating Unit** automatic voltage regulator (AVR) and static VAR compensator (SVC) actions, and transient decay (typically 5 seconds after the fault clearance or system switching have taken place), but before any other automatic or manual tap-changing and switching actions have commenced.

Formatted: Right

Supplier

a. A person supplying electricity under an Electricity Supply Licence; or

b. A person supplying electricity under exemption under the Act; in each case acting in its capacity as a supplier of electricity to Customers.

System

An electrical network running at various voltages.

System Stability

The ability of the **System**, for a given initial operating condition, to regain a state of operating equilibrium, after being subjected to a given system disturbance, with most **System** variables within acceptable limits so that practically the whole **System** remains intact.

Synchronism

The condition under which a **Generating Unit** or **System** is connected to another **System** so that the frequencies, voltage and phase relationships of that **Generating Unit** or **System**, as the case may be, and the **System** to which it is connected are similar within acceptable tolerances.

Total System

The integrated system of connected **Generating Plant, Transmission System, Distribution Systems** and associated electrical demand.

Transmission Licence

The licence granted under Section 6(1)(b) of the **Act**.

Transmission System

A system of **High Voltage** lines and plant owned by the holder of a **Transmission Licence** and operated by the **NETSO,** which interconnects **Power Station**s and substations.

Type Tested

A **Generating Unit** design which has been tested by the **Manufacturer**, component manufacturer or supplier, or a third party, to ensure that the design meets the requirements of this EREC, and for which the **Manufacturer** has declared that all products supplied into the market will be constructed to the same standards, and with the same protection settings as the tested product.

User

A term used in various sections of the **Distribution Code** to refer to the persons using the **DNO'**s **Distribution System**.

5 Legal Aspects

5.1 The operation and design of the electricity system in Great Britain is defined principally by the Electricity Act (1989 as amended), the Electricity Safety Quality and Continuity Regulations (ESQCR) 2002, as well as general considerations under the Health and Safety at Work Act (HASWA) 1974 and the Electricity at Work Regulations (EaWR) 1989. A brief summary of the main statutory obligations on **DNO**s, **Generator**s and Users is included as Appendix 13.9.

5.2 Under section 21 of the Electricity Act, **Generator**s may be required to enter into a bespoke **Connection Agreement** with the **DNO**. Such a **Connection Agreement** will specify the terms and conditions including technical, operating, safety and other requirements under which **Generating Plant** is entitled to remain connected to the **Distribution System**. It is usual to include site specific commercial issues, including recovery of costs associated with the connection, GDUoS (**Generator** Distribution Use of System) charges and the applicable energy loss adjustment factors, in **Connection Agreement**s. It is also common practice by some **DNO**s to collect the technical issues into a subordinate "Technical and Operating Agreement" which is given contractual force by the **Connection Agreement**.

5.3 **DNO**s are required by their licences to have in force and comply with the **Distribution Code**. **Generators** will be bound by their licences or by their **Connection Agreements**, or both, to comply with the **Distribution Code**.

5.4 In accordance with DPC5.4 of the **Distribution Code**, when details of the interface between a **Generating Plant** and the **Distribution System** have been agreed a site responsibility schedule detailing ownership, maintenance, safety and control responsibilities will be drafted. The site responsibility schedule and operation drawing shall be displayed at the point of interconnection between the **DNO'**s and **Generator'**s systems, or as otherwise agreed.

5.5 The **DNO**s have statutory and licence obligations within which they have to offer the most economic, technically feasible option for connecting **Generating Plant** to their **Distribution System**s. The main general design obligations imposed on the **DNO**s are to:

a. maintain supplies to their **Customers** within defined statutory voltage and frequency limits;

b. ensure that the **Distribution Systems** at all voltage levels are adequately earthed;

c. comply with the "Security of Supply" criteria defined in EREC P2;

d. meet improving standards of supply in terms of customer minutes lost (CMLs) and the number of customer interruptions (CIs);

e. facilitate competition in the connection, generation and supply of electricity.

5.6 Failure to meet any of the above obligations will incur legal or regulatory penalties. The first two criteria, amongst others, define the actions needed to allow islanded operation of the **Generating Plant** or to ensure that the **Generating Plant** is rapidly disconnected from the **Distribution System** under islanded conditions. The next two criteria influence the type of connection that may be offered without jeopardising regulated standards.

Formatted: Right

5.7 General conditions of supply to **Customer**s are also covered by Regulation 23 of the ESQCR 2002. Under Regulation 26 of the ESQCR 2002 no **DNO** is compelled to commence or continue a supply if the **Customer's Installation** may be dangerous or cause undue interference with the **Distribution System** or the supply to other **Customer**s. The same regulation empowers the **DNO** to disconnect any part of the **Customer**'s **Installation** which does not comply with the requirements of Regulation 26. It should also be noted that each installation has to satisfy the requirements of the HASWA 1974 and the EaWR 1989.

5.8 Regulations 21 and 22 of the ESQCR 2002 require installations that have alternative sources of energy to satisfy Regulation 21 in relation to switched alternative supplies, and Regulation 22 in the case of sources of energy running in parallel with the **Distribution System**.

5.9 Under Regulation 22 of the ESQCR 2002, no person may operate **Generating Plant** in parallel with a public **Distribution System** without the agreement of the **DNO**.

5.10 All **Generator**s have to comply with the appropriate parts of the ESQCR.

5.11 The general requirements for **Generator**s wishing to connect their **Generating Plant** to a **Distribution System** are contained in the **Distribution Code.**

5.12 It is important to note that both the **Distribution Code** and **Grid Code** use the terms **Large, Medium and Small** in relation to **Power Station**s. These terms are defined in the Codes and various parts of the Codes apply to different size **Power Station**s, with generally no **Grid Code** requirements applying to **Small Power Station**s. Any collection of **Generating Plant** under the control of one owner or operator in one installation is classed in the Codes as a **Power Station**.

5.13 **Generators** with **Medium Power Station**s will have to comply with a few specific **Grid Code** clauses. The requirement for these clauses is contained in DPC7 of the **Distribution Code**.

5.14 **Power Stations** that are to be connected to a **Distribution System** and contain **Generating Unit**s that trade in the wholesale market as Balancing Mechanism Units or have for other reasons become a party to the Balancing and Settlement Code and/or National Grid's Connection and Use of System Code, will then have to comply with the **Grid Code** requirements for **Generating Plant**.

5.15 Information, which should assist **Generator**s wishing to connect to the **Distribution System** at **High Voltage (HV)**, will be published by the **DNO** in accordance with condition 25 of the **Distribution Licence**. This is known as the Long Term Development Statement (LTDS). The general form and content of this statement is specified by Ofgem and covers the existing **Distribution System** as well as authorised changes in future years on a rolling basis.

5.16 Under the terms of the Electricity Act 1989 (as amended), generation of electricity is a licensed activity, although the Secretary of State, may by order[2] grant exemptions. Broadly, generating stations of less than 50MW are automatically exempt from the need to hold a licence, and those between 50MW and 100MW may apply to ~~DECC~~ the Department for Business, Energy and Industrial Strategy for an exemption if they wish.

5.17 **Generator**s who are licensed will be required to become parties to the Balancing and Settlement Code and to the Connection and Use of System Code. They will also be bound in their licences to comply with the **Grid Code** and the **Distribution Code**.

5.18 **Generator**s will need appropriate contracts in place for the purchase of any energy that is exported from the **Generator**s' **Power Station**s, and for any energy imported. For this purpose the **Generator** will need contracts with one or more **Supplier**s**,** and where the **Supplier** does not provide it, a meter operator agreement with the appropriate provider.

5.19 **Generator**s wishing to trade ancillary services for National Grid purposes will need appropriate contracts in place with the National Grid Electricity Transmission in its role as Great Britain System Operator.

6 Connection Application

6.1 General

This document describes the processes that shall be adopted for both connection of single **Generating Units** and installations that comprise of a number of **Generating Units** The process for the connection of single or multiple **Type Tested Generating Units** with an aggregate installed capacity of less than or equal to 16A per phase is described in EREC G83; the connection of other **Generating Unit**s (ie **Generating Unit**s outside the scope of EREC G83) is covered by this Engineering Recommendation.

Where an installation comprises multiple **Generating Units** the application process and commissioning requirements should be based on the **Power Station** capacity (ie the aggregate capacity of all the **Generating Unit**s to be installed in any one installation), and whether the individual **Generating Units** are **Type Tested**.

Where a new **Generating Unit** is to be connected to an existing installation then the table below will apply to the aggregate capacity of the complete installation irrespective of technology. Only the new **Generating Unit** will be required to meet protection requirements of this Engineering Recommendation.

[2] see http://www.opsi.gov.uk/si/si2001/20013270.htm

Formatted: Right

6.1.1 The following table describes key differentiating features between Power Station capacity that influence the application, connection and commissioning process.

Power Station capacity (ie the aggregate capacity of all the Generating Units to be installed in any one installation).	**≤ 16A per phase**		**> 16A per phase**		
			≤ 50kW 3 phase (or 17kW 1 phase)[3]	**> 50kW 3 phase (or 17kW 1 phase)**	**All Capacities**
Approval Status of individual Generating Units	**G83/~~2~~ compliant**	**Not G83/~~2~~ compliant**	**G59/3 or G83 Type Tested Equipment**	**G59/3 Type Tested Equipment**	**Not G59/3 Type Tested**
Consent required prior to connection **DNO** to carry out impact assessment / electrical studies	As G83	YES	YES	YES	YES
Protection Requirements	As G83/~~2~~	As G59/~~3-2~~/3-3. Section 10	As G59/~~3-2~~/3-3. Section 10	As G59/~~3-2~~/3-3. Section 10	As G59/~~3-2~~/3-3 Section 10
Commissioning Tests	As G83/~~2~~	As G59/~~3-2~~/3-3 Sections 12.3 and 12.4	As G59/~~3-2~~/3-3 Section 12.3	As G59/~~3-2~~/3-3 Section 12.3	As G59/~~3-2~~/3-3 Sections 12.3 and 12.4
Witness testing required by **DNO**	No[4]	At the discretion of the **DNO**[5]	As G59/~~3-2~~/3-3 section 12.1.4[5]	At the discretion of the **DNO**[5]	YES – for **HV**, but at the discretion of the **DNO** for **LV**[5]

6.1.2 **Generating Unit(s) ≤ to16A per phase and EREC G83 compliant**

[3] The rationale for the break points is the support and penetration envisaged for "microgeneration" as captured in the 2006 Climate Change and Sustainable Energy Act 2006, which defines microgeneration as up to 50kW$_e$.

[4] **DNO**s may inspect selected installations, but without imposing a charge.

[5] The **DNO** shall charge the **Generator** for attendance of staff for witness testing at its own commercial rates.

A connection procedure to facilitate the connection and operation of **Type Tested Generating Unit**s with aggregate installed capacity of less than or equal to 16A per phase in parallel with public **Low Voltage Distribution System** is given in EREC G83 and is not considered further in this document.

6.1.3 **Generating Unit(s) ≤ to16A per phase and not EREC G83 compliant**

Where the **Generating Unit** does not meet the requirements of EREC G83 either because the technology is not covered by one of the technology annexes or because the **Generating Unit** has not successfully been through the type testing process the connection process shall follow that for larger **Generating Unit**s as described in this document.

6.1.4 **Generating Unit(s)** EREC G59 **Type Tested** (>16A per phase but ≤ 50kW 3 phase (or 17 kW 1 phase))

The use of **Type Tested** equipment simplifies the connection process, the protection arrangements and reduces the commissioning test requirements. The process is described in this document.

6.1.5 **Generating Unit(s)** not EREC G59 **Type Tested** or > than 50kW 3 phase (or 17kW 1 phase)

The connection process for these **Generating Unit**s is described in this document. When making a connection application for **Medium and Large Power Station**s, there are requirements that should be considered in addition to the general requirements identified in this document.

Medium and Large Power Stations are bound by the requirements of the **Grid Code**. In the case of **Large Power Stations**, the **Grid Code** will generally apply in full. For **Medium Power Station**s, only a small subset of the **Grid Code** applies directly, and the relevant clauses are listed in DPC7 of the **Distribution Code**.

Where **Grid Code** requirements apply, under the **Distribution Code** it is the **Generator**'s responsibility to comply with the **Grid Code** requirements.

6.2 Application for Connection

6.2.1 Information about the **Generating Unit**(s) is needed by the **DNO** so that it can assess the effect that a **Power Station** may have on the **Distribution System**. Section DPC7 and the Distribution Data Registration Code (DDRC) of the **Distribution Code** detail the parameters to be supplied by a **Customer** wishing to connect **Generating Unit(s)** that do not comply with EREC G83 to a **Distribution System**. DPC7 also enables the **DNO** to request more detailed information if required.

6.2.2 Less than or equal to 16A per phase and EREC G83 Compliant **Generating Unit**

The application process is described in EREC G83 and is not considered further in this document.

Formatted: Right

6.2.3 Less than or equal to 16A per phase and not EREC G83 compliant **Generating Unit**

The **Generator** should apply to the local **DNO** for connection using the **DNO**s standard application form (available from the **DNO**s website). On receipt of the application, the **DNO** will assess whether any **Distribution System** studies are required and whether there is a requirement to witness the commissioning tests. In some cases studies to assess the impact on the **Distribution System** may need to be undertaken before a firm quotation can be provided to the **Customer**. On acceptance of the quote, any works at the connection site and any associated facilitating works will need to be completed before the **Generating Unit** can be commissioned. On successful completion of the commissioning tests, the **DNO** will sanction permanent energisation of the **Generating Unit**.

6.2.4 **Power Stations** >16A per phase but ≤ 50kW three phase (or 17kW single phase) comprising **Generating Units Type Tested** to EREC G59 or EREC G83 (excluding G83/1 and G83/1-1)

The application shall be made using the form in Appendix 13.5 which should include the **Type Tested** Reference Number. Where a reference number is not available the **Generator** or **Installer** shall provide the **DNO** with a **Type Test** report as per Appendix 13.1 confirming that the **Generating Unit** has been **Type Tested** to satisfy the requirements of this Engineering Recommendation. Guidance to **Manufacturers** on type testing is included in Appendix 13.8 of this document. On receipt of the application, the **DNO** will assess whether any **Distribution System** studies are required and whether there is a requirement to witness the commissioning tests.

6.2.5 **Power Stations** which include any non-**Type Tested Generating Units** or any **Power Stations** >50kW three phase (or 17kW single phase)

The connection process is similar to that described in 6.2.3 above, although detailed system studies will almost certainly be required and consequently the **Generator** might need to provide additional information. The information should be provided using the standard application form (generally available from the **DNO**s website). The data that might be required will all be defined within DPC7 and DPC8 and the Distribution Data Registration Code (DDRC) of the **Distribution Code**.

6.3 System Analysis for Connection Design

6.3.1 **DNO**s use a variety of modelling tools to undertake system analysis. Their exact needs for data and models will vary dependent on the voltage level, size, and location of the connection. Generally the **DNO** will seek the key information from the **Generator** via the application forms referred to in 6.2 above. Occasionally the **DNO** may also need additional data for modelling purposes and will seek this information in accordance with the 'Distribution Data Registration Code' (DDRC) within the **Distribution Code** as part of the connection process.

6.3.2 In the course of planning and designing a power system, it is often necessary to model a small section of the wider system in detail. This could be an embedded system at 132kV or less, which is connected to the **Transmission System** (400/275kV) via one or more step-down transformers.

6.3.3 For plant connected at **HV**, it is generally necessary to build an equivalent model of the **Distribution System**. An example is shown as Fig 6.1 below.

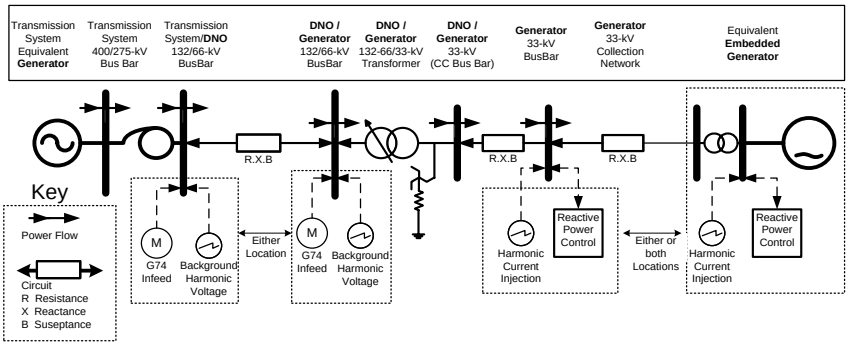

Fig 6.1 Example equivalent **Total System** representation

This model will typically include equivalent source representing existing **Generating Plant** fault level arising from asynchronous plant (EREC G74), interconnection impedances, loads, and possibly the **Generator'**s proposal for reactive compensation plant. The parameters of these elements will depend upon the selection of the boundary nodes between the equivalent and detailed networks in the model.

6.3.4 It may be beneficial to model some of the 'active' elements in full detail. Supergrid, grid primary and other transformers can be considered active for the purpose of determining voltage control limits. Knowledge of the voltage control set points, transformer tap changer deadbands, and control methods is often essential. Also a knowledge of which items of **Generating Plant** are mainly responsible for the range of fault contributions offered at the connection point by the **DNO** is a useful addition. Fault contribution may also arise from other rotating plant – shown here as an equivalent asynchronous motor (EREC G74).

6.3.5 This equivalent **Total System** model will not accurately represent the fast dynamic (sub second) behaviour of the active elements within the Distribution and Transmission System.

6.3.6 For synchronous machines, control systems for **Generating Unit**s and prime movers have traditionally been provided and modelled in transparent transfer-function block diagram form. These models have been developed over many years and include lead/lag elements, gains, limiters and non-linear elements and may be tuned to obtain a satisfactory response for the particular **Generating Unit** and grid connection. The requirement to submit models in this form for directly connected synchronous **Generating Unit**s is written into the **Grid Code and Distribution Code**.

6.3.7 For other generation technologies, the **Grid Code** includes the requirement to submit validated detailed models in respect of non-synchronous **Generating Unit**s which are aggregated into a 'Power Park Module' and where they are also classed as **Medium or Large Power Station**s.

Formatted: Right

6.3.8 The **Distribution Code** has a similar requirement of the **Generator** where the **DNO** deems it necessary to ensure **System Stability** and security. The DDRC accepts models of both Synchronous/Asynchronous and Series Converter Connected **Generating Unit**s.

6.3.9 **DNO**s have a **Grid Code** obligation (CC 3.3) to ensure that validated detailed models are obtained in respect of **Medium Power Station**s embedded within their **Distribution Systems** unless they are connected at a voltage level below that of the lower voltage side of the relevant supergrid transformer. This requires the **Generating Plant** manufacturer to submit a **Generating Unit** or Power Park model in a format suitable for the **NETSO** usually in a documented block diagram format.

6.3.10 For the **DNO**s own purposes, should a model be required, it would normally be requested in a compiled form suitable for use with the particular variety of power system analysis software they use. Recently there is a move by **Manufacturer**s to create 'black-box' models of their **Generating Unit**s or Power Parks using their **Generating Unit**s. These are programmed for compatibility with industry standard power analysis modelling packages. This is in order to protect the **Manufacturer**s intellectual property and so lessen the need for confidentiality agreements between parties. There are potential advantages and disadvantages to this approach, but must be generally welcomed provided that the two main disadvantages of this approach, as described below, can be resolved:

a. The model must not be software 'version' specific ie will work in all future versions, or has an assurance of future upgrades for a particular software package;

b. The **Manufacturer** must provide assurance that the black box model correctly represents the performance of the **Generating Unit** for load flow, fault level and transient analysis for the typical range of faults experienced by **DNO**s.

7 CONNECTION ARRANGEMENTS

7.1 Operating Modes

7.1.1 **Generating Plant** may be designed for one of three operating modes. These are termed long-term parallel operation, infrequent short-term parallel operation and switched alternative-only operation.

7.2 Long-Term Parallel Operation

7.2.1 This refers to the frequent or long-term operation of **Generating Plant** in parallel with the **Distribution System**. Unless otherwise stated, all sections in this Engineering Recommendation are applicable to this mode of operation.

7.3 Infrequent Short-Term Parallel Operation

7.3.1 This mode of operation typically enables **Generating Plant** to operate as a standby to the **DNO**s supply. A short-term parallel is required to maintain continuity of supply during changeover and to facilitate testing of the **Generating Plant**.

7.3.2 In this mode of operation, parallel operation of the **Generating Plant** and the **Distribution System** will be infrequent and brief and under such conditions, it is considered acceptable to relax certain design requirements, such as protection requirements, that would be applicable to long-term parallel operation.

7.3.3 As the design requirements for **Generating Plant** operating in this mode are relaxed compared with those for long-term parallel operation, it is necessary for the **DNO** to specify a maximum frequency and duration of short-term parallel operation, to manage the risk associated with the relaxed design requirement.

The **Generating Plant** may be permitted to operate in parallel with the **DNO**s **Distribution System** for no more than 5 minutes in any month, and no more frequently than once per week. If the duration of parallel connection exceeds this period, or this frequency, then the **Generating Plant** must be considered as if it is, or can be, operated in Long-Term Parallel Operation mode. An alternative frequency and duration may be agreed between the **DNO** and the **Generator**, taking account of particular site circumstances and **Generating Plant** design. An electrical time interlock should be installed to ensure that the period of parallel operation does not exceed the agreed period. The timer should be a separate device from the changeover control system such that failure of the auto changeover system will not prevent the parallel being broken.

7.3.4 The following design variations from those in the remainder of the document are appropriate for infrequent short-term parallel operation:

a. Protection Requirements – Infrequent short-term parallel operation requires only under/over voltage and under/over frequency protection. This protection only needs to be in operation for the time the **Generating Plant** is operating in parallel. A specific Loss of Mains (LoM) protection relay is not required, although many multifunction relays now have this function built in as standard. Similarly, additional requirements such as neutral voltage displacement, intertripping and reverse power are not required. This is based on the assumptions that as frequency and duration of paralleling during the year are such that the chance of a genuine LoM event coinciding with the parallel operation is unlikely. However, if a coincidence does occur, consideration must be given to the possibility of the **Generating Plant** supporting an island of **Distribution System** as under voltage or under frequency protection is only likely to disconnect the **Generating Plant** if the load is greater than the **Generating Plant** capacity. Consequently it is appropriate to apply different protection settings for short term parallel connection. As this **Generating Plant** will not be expected to provide grid support or contribute to system security, more sensitive settings based on statutory limits would compensate for lack of LoM protection. Ultimately, if an island was established the situation would only persist for the duration of the parallel operation timer setting before generation was tripped.

b. Connection with Earth – It is recommended that the **Generating Unit**'s star points or neutrals are permanently connected to earth. In that way, the risks associated with switching are minimized and the undesirable effects of circulating currents and harmonics will be tolerable for the timescales associated with short-term paralleling.

c. Fault Level – There is the need to consider the effect of the **Generating Plant** contribution to fault level. The risks associated with any overstressing during the short term paralleling will need to be individually assessed and the process for controlling this risk agreed with the **DNO**.

Formatted: Right

d. Voltage rise / **Step Voltage Change** - Connections should be designed such that the operation of a **Generating Plant** does not produce voltage rise in excess of statutory limits. In general this should not be an issue with most Short-Term Parallel Operation as at the time of synchronising with the mains most sites will normally be generating only sufficient output to match the site load. Therefore the power transfer on synchronising should be small, with the **Generating Unit** ramping down to transfer site load to the mains. If the **Generating Unit** tripped at this point it could introduce a larger **Step Voltage Change** than would normally be acceptable for loss of **Generating Plant** operating under a long-term parallel arrangement but in this event it could be regarded as an infrequent event and a step change of up to 10% as explained in Section 9.5 would be acceptable.

e. Out-of-phase capabilities - All newly installed switchgear should be specified for the duty it is to undertake. Where existing switchgear which might not have this capability is affected by short-term paralleling it is expected that it will not be warranted to replace it with gear specifically tested for out-of-phase duties, although the owner of each circuit breaker should specifically assess this. Clearly the synchronizing circuit breaker (owned by the **Generator**) must have this certified capability. For the avoidance of doubt it is a requirement of the Electricity at Work Regulations that "no electrical equipment shall be put into use where its strength and capability may be exceeded in such a way as may give rise to danger." Paragraph 9.4.6 below provides more information on the assessment of such situations.

7.3.5 Some manufacturers have developed fast acting automatic transfer switches. These are devices that only make a parallel connection for a very short period of time, typically 100 - 200ms. Under these conditions installing a conventional G59 protection with an operating time of 500ms is not appropriate when the parallel will normally be broken before the protection has a chance to operate. There is however the risk that the device will fail to operate correctly and therefore a timer should be installed to operate a conventional circuit breaker if the parallel remains on for more than 1s. The switch should be inhibited from making a transfer to the **DNO** network whilst voltage and frequency are outside expected limits.

7.4 Switched Alternative-Only Operation

7.4.1 General

7.4.1.1 Under this mode of operation it is not permissible to operate **Generating Plant** in parallel with the **Distribution System**. Regulation 21 of the ESQCR states that it is the **Generator's** responsibility to ensure that all parts of the **Generating Plant** have been disconnected from the **Distribution System** and remain disconnected while the **Generating Plant** is operational. The earthing, protection, instrumentation etc. for this mode of operation are the responsibility of the **Generator**, however where such **Generating Plant** is to be installed, the **DNO** shall be given the opportunity to inspect the equipment and witness commissioning of any changeover equipment and interlocking.

7.4.1.2 The changeover devices must be of a 'fail-safe' design so that one circuit controller cannot be closed if the other circuit controller in the changeover sequence is closed, even if the auxiliary supply to any electro-mechanical devices has failed. Changeover methods involving transfer of removable fuses or those having no integral means of preventing parallel connection with the **Distribution System** are not acceptable. The equipment must not be installed in a manner which interferes with the **DNO**s cut-out, fusegear or circuit breaker installation, at the supply terminals or with any metering equipment.

7.4.1.3 The direct operation of circuit-breakers or contactors must not result in the defeat of the interlocking system. For example, if a circuit-breaker can be closed mechanically, regardless of the state of any electrical interlocking, then it must have mechanical interlocking in addition to electrical interlocking. Where an automatic mains fail type of **Generating Plant** is installed, a conspicuous warning notice should be displayed and securely fixed at the **Point of Supply**.

7.4.2 **Changeover Operated at HV**

7.4.2.1 Where the changeover operates at **HV**, the following provisions may be considered by the **Generator** to meet the requirements of Regulation 21 of the ESQCR:

a. An electrical interlock between the closing and tripping circuits of the changeover circuit breakers;

b. A mechanical interlock between the operating mechanisms of the changeover circuit breakers;

c. An electro-mechanical interlock in the mechanisms and in the control circuit of the changeover circuit breakers;

d. Two separate contactors which are both mechanically and electrically interlocked.

Electrically operated interlocking should meet the requirements of BS EN 61508.

7.4.2.2 Although any one method may be considered to meet the minimum requirement, it is recommended that two methods of interlocking are used wherever possible. The Generator must be satisfied that any arrangement will be sufficient to fulfil their obligations under ESQCR.

7.4.3 **Changeover Operated at LV**

7.4.3.1 Where the changeover operates at **LV**, the following provisions may be considered by the **Generator** to meet the requirements of Regulation 21 of the ESQCR:

a. Manual break-before-make changeover switch;

b. separate switches or fuse switches mechanically interlocked so that it is impossible for one to be moved when the other is in the closed position;

c. An automatic break-before-make changeover contactor;

d. Two separate contactors which are both mechanically and electrically interlocked;

e. A system of locks with a single transferable key.

Formatted: Right

Electrically operated interlocking should meet the requirements of BS EN 61508.

7.4.3.2 The **Generator** must be satisfied that any arrangement will be sufficient to fulfil their obligations under ESQCR.

7.5 Balance of Generating Unit output at LV

7.5.1. EREC G83 allows the connection of **Type Tested Generating Units** ≤16A per phase without consultation with the **DNO**. Connection of single phase units up to 17kW under EREC G59 is allowable, but this requires application to the **DNO** and may not be possible in many cases for technical reasons depending on point of connection and network design.

7.5.2. A solution to these voltage issues and phase imbalance issues may be to utilise 3-phase **Generating Unit**s (the same export power will result in lower voltage rises due to decreased line currents and a 3 phase connection will result in voltage rises of a sixth of those created by a single phase connection), or to use multiple single phase **Generating Unit**s connected across three phases. If these individual Generating Units are of differing ratings, current and voltage imbalance may occur. To maintain current and voltage imbalance within limits the Installer shall consider the phase that each Generating Unit is connected to in an installation. In addition the DNO may define to an Installer the phases to which the Generating Units in any given installation should be connected.

7.5.3. An **Installer** should design an installation on a maximum unbalance output of 16A between the highest and lowest phase. Where there are a mixture of different technologies, or technologies which may be operational at different times (eg. wind and solar) **Generating Unit**s shall be connected to give a total imbalance of less than 16A based on assumed worst case conditions, those being:

a. One **Generating Unit** at maximum output with the other(s) at zero output –all combinations to be considered.

b. Both / all **Generating Units** being at maximum output

A **Generating Unit** technology which operates at different times due to location eg east and west facing roofs for PV, must allow for the PV on one roof to be at full output and the PV on the other roof to be at zero output.

7.5.4 In order to illustrate this requirement examples of acceptable and unacceptable connections have been given in Appendix 13.10.

7.6 Generation Unit capacity for single and split LV phase supplies

7.6.1 The maximum aggregate capacity of Generation Plant that can be connected to a single phase supply is 17kW. The maximum aggregate capacity of Generation Plant that can be connected to a split single phase supply is 34kW.

7.6.2 There is no requirement to provide intertripping between single phase inverters where these are installed on multi-phase supplies up to a limit of 17kW per phase (subject to balance of site output as per section 7.5). A single phase 17kW connection may result in an imbalance of up to 17kW following a **Distribution System** or **Generating Unit** outage. However the connection design should result in imbalance under normal operation to be below 16A between phases as noted above.

7.6.3 **Power Station**s with a capacity above 17kW per phase are expected to comprise three phase units. The requirement to disconnect all phases following a fault in the **Customers Installation** or a **Distribution System** outage applies to three phase inverters only and will be tested as part of the type testing of the **Generating Unit**. In some parts of the country where provision of three phase networks is costly then the **DNO** may be able to provide a solution using single or spilt phase networks for **Power Stations** above the normal limits as set out above.

7.7 Voltage Management Units in Customer's premises

7.7.1 Voltage Management Units are becoming more popular and use various methods, in most cases, to reduce the voltage supplied from the **DNO's System** before it is used by the **Customer**. In some cases where the **DNOs System** voltage is low they may increase the voltage supplied to the **Customer**. Some technologies are only designed to reduce voltage and can not increase the voltage.

7.7.2 The use of such equipment has the advantage to the **Customer** of running appliances at a lower voltage and in some cases this can reduce the energy consumption of the appliance. Some appliances when running at a lower voltage will result in higher current consumption as the device needs to take the same amount of energy from the **System** to carry out its task.

7.7.3 If a Voltage Management Unit is installed between the Entry Point and the Generating Unit in a Customers Installation, it may result in the voltage at the Customer side of the Voltage Management Unit remaining within the limits of the protection settings defined in section 10.5.7.1 while the voltage at the Entry Point side of the unit might be outside the limits of the protection settings. This would negate the effect of the protection settings.Therefore this connection arrangement is not acceptable and all **Generating Units** connected to **DNO LV Systems** under this Engineering Recommendation must be made on the **Entry Point** side of any Voltage Management Unit installed in a **Customers Installation.**

7.7.4 **Customers** should note that the overvoltage setting defined in section 10.5.7.1 is 4% above the maximum voltage allowed for the voltage from the **DNO System** under the ESQCR and that provided their **Installer** has designed their installation correctly there should be very little nuisance tripping of the **Generating Unit**. Frequent nuisance tripping of a **Generating Unit** may be due to a fault in the **Customers Installation** or the operation of the **DNO's System** at too high a voltage. **Customers** should satisfy themselves that their installation has been designed correctly and all **Generating Units** are operating correctly before contacting the DNO if nuisance tripping continues.. Under no circumstances should they resort to the use of Voltage Management Units installed between the **Entry Point** and the **Generating Unit**.

Formatted: Right

8 EARTHING

8.1 General

8.1.1 The earthing arrangements of the **Generating Plant** shall satisfy the requirements of DPC4 of the **Distribution Code**.

8.2 HV Generating Plant

8.2.1 **HV Distribution System**s may use direct, resistor, reactor or arc suppression coil methods of earthing the **Distribution System** neutral. The magnitude and duration of fault current and voltage displacement during earth faults depend on which of these methods is used. The method of earthing therefore has an impact on the design and rating of earth electrode systems and the rating of plant and equipment.

8.2.2 To ensure compatibility with the earthing on the **Distribution System** the earthing arrangements of the **Generating Plant** must be designed in consultation and formally agreed with the **DNO**. The actual earthing arrangements will also be dependent on the number of **Generating Unit**s in use and the **Generators** system configuration and method of operation. The system earth connection shall have adequate electrical and mechanical capability for the duty.

8.2.3 **HV Distribution System**s operating at voltages below 132kV are generally designed for earthing at one point only and it is not normally acceptable for **HV Customers** or **HV Generator**s to connect additional **HV** earths when operating in parallel. One common exception to this rule is where the **Generating Plant** uses an **HV** voltage transformer (VT) for protection, voltage control or instrumentation purposes and this VT requires an **HV** earth connection to function correctly.

HV Distribution Systems operating at 132kV are generally designed for multiple earthing, and in such cases the earthing requirements should be agreed in writing with the **DNO**.

8.2.4 In some cases the **DNO** may allow the **Generator** to earth the **Generator's HV System** when operating in parallel with the **Distribution System**. The details of any such arrangements shall be agreed in writing between the relevant parties.

8.2.5 **Generator**s must take adequate precautions to ensure their **Generating Plant** is connected to earth via their own earth electrodes when operating in isolation from the **Distribution System**.

8.2.6 Typical earthing arrangements are given in figures 8.1 to 8.4.

8.2.7 Earthing systems shall be designed, installed, tested and maintained in accordance with ENA TS 41-24, (Guidelines for the design, installation, testing and maintenance of main earthing systems in substations), BS7354 (Code of Practice for Design of Open Terminal Stations) and BS7430 (Code of Practice for Earthing). Precautions shall be taken to ensure hazardous step and touch potential do not arise when earth faults occur on **HV** systems. Where necessary, **HV** earth electrodes and **LV** earth electrodes shall be adequately segregated to prevent hazardous earth potentials being transferred into the **LV Distribution System**.

Figure 8.1 - Typical Earthing Arrangement for an **HV Generating Unit** Designed for Independent Operation (ie Standby Operation) Only

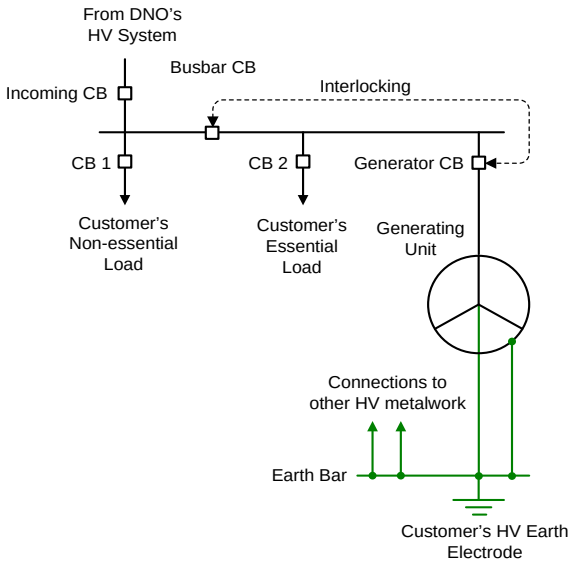

NOTE:

(1) Interlocking between busbar CB and **Generator** CB is required to prevent parallel operation of the **Generating Unit** and **DNO System**

Formatted: Right

Figure 8.2 - Typical Earthing Arrangement for an **HV Generating Unit** Designed for Parallel Operation Only

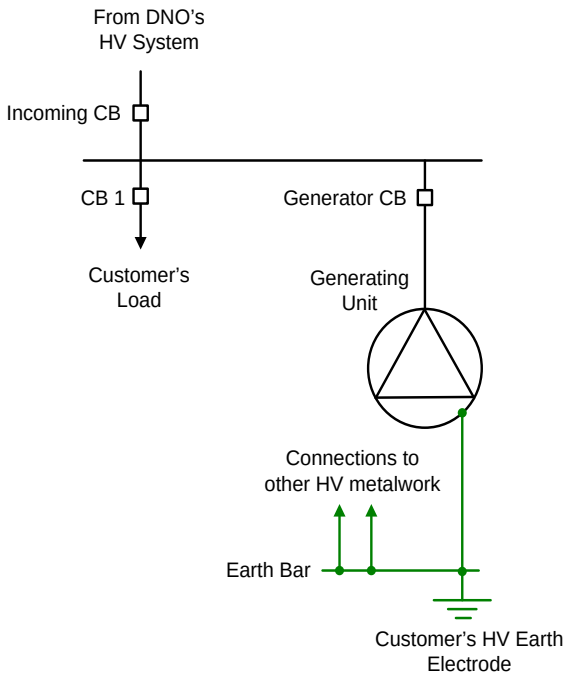

NOTE:

(1) **Generating Unit** winding is not connected to earth irrespective of whether it is star or delta connected

Figure 8.3 - Typical Earthing Arrangement for an **HV Generating Unit** Designed for both Independent Operation (ie Standby Operation) and Parallel Operation

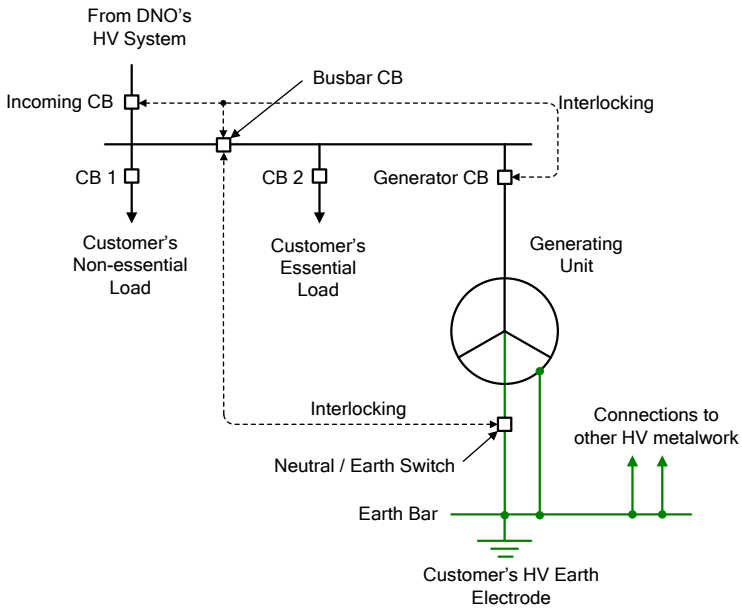

NOTE:

(1) Protection, interlocking and control systems are designed to ensure that busbar CB is open when the **Generating Unit** operates independently from the **DNO** system.
(2) When the **Generating Unit** operates independently from the **DNO** system (ie busbar CB is open) the neutral / earth switch is closed.
(3) When the **Generating Unit** operates in parallel with the **DNO** system (ie busbar CB is closed) the neutral / earth switch is open.

Formatted: Right

Figure 8.4 - Typical Earthing Arrangement for two **HV Generating Unit**s Designed for both Independent Operation (ie Standby Operation) and Parallel Operation

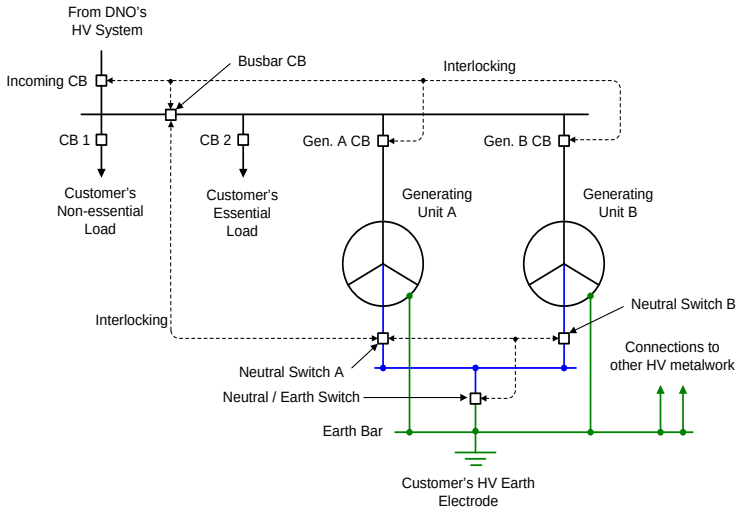

NOTE:

(1) Protection, interlocking and control systems are designed to ensure that busbar CB is open when the **Generating Units** operate independently from the **DNO** system.
(2) If one **Generating Units** is operating independently from the **DNO** system (ie busbar CB is open) then its neutral switch is closed and the neutral / earth switch is closed.
(3) If both **Generating Units** are operating independently from the **DNO** system (ie busbar CB is open) then <u>one</u> neutral switch is closed and the neutral / earth switch is closed.
(4) If one or both of the **Generating Units** are operating in parallel with the **DNO** system (ie busbar CB is closed) then both neutral switches and the neutral /earth switch are open.

8.3 LV Generating Plant

8.3.1 **LV Distribution System**s are always solidly earthed, and the majority are multiple earthed.

8.3.2 The specific earthing requirements for **LV** connected **Generation Plant** are described in DPC7.4.

8.3.3 The following diagrams 8.5 to 8.9 show typical installations.

Formatted: Right

Figure 8.5 - Typical Earthing Arrangement for an **LV Generating Unit** Connected to the **DNO** System at **HV** and Designed for both Independent Operation (ie Standby Operation) and Parallel Operation.

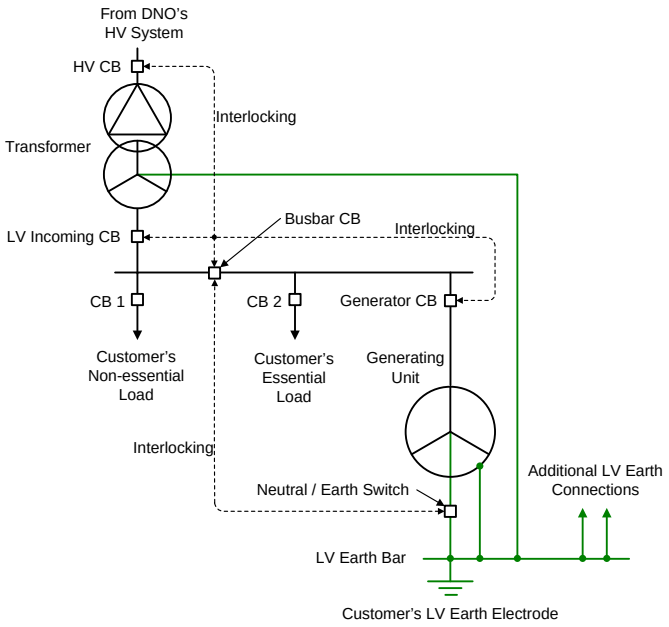

NOTE:

(1) **HV** earthing is not shown.
(2) Protection, interlocking and control systems are designed to ensure that busbar CB is open when the **Generating Unit** operates independently from the **DNO** system.
(3) When the **Generating Unit** operates independently from the **DNO** system (ie busbar CB is open) the neutral earth switch is closed.
(4) When the **Generating Unit** operates in parallel with the **DNO** system (ie busbar CB is closed) the neutral / earth switch is open.

Figure 8.6 - Typical Earthing Arrangement for an **LV Generating Unit** Embedded within a **Customer HV** System and Designed for both Independent Operation (ie Standby Operation) and Parallel Operation

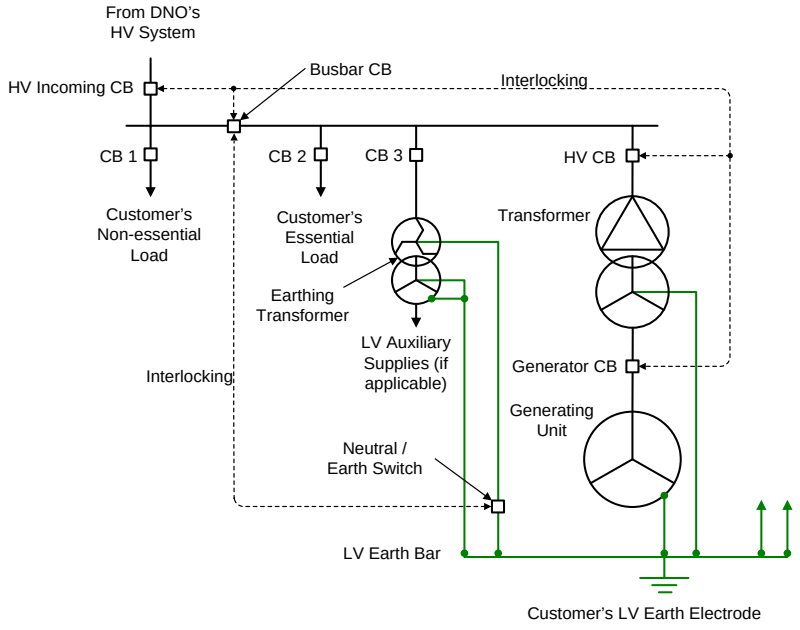

NOTE:

(1) **HV** earthing is not shown.
(2) Protection, interlocking and control systems are designed to ensure that busbar CB is open when the **Generating Unit** operates independently from the **DNO** system.
(3) When the **Generating Unit** operates independently from the **DNO** system (ie busbar CB is open) the neutral / earth switch is closed.
(4) When the **Generating Unit** operates in parallel with the **DNO** system (ie busbar CB is closed) the neutral / earth switch is open.

Formatted: Right

Figure 8.7 - Typical Earthing Arrangement for an **LV Generating Unit** Embedded within a **Customer LV** System and Designed for Independent (i.e. Standby) Operation Only

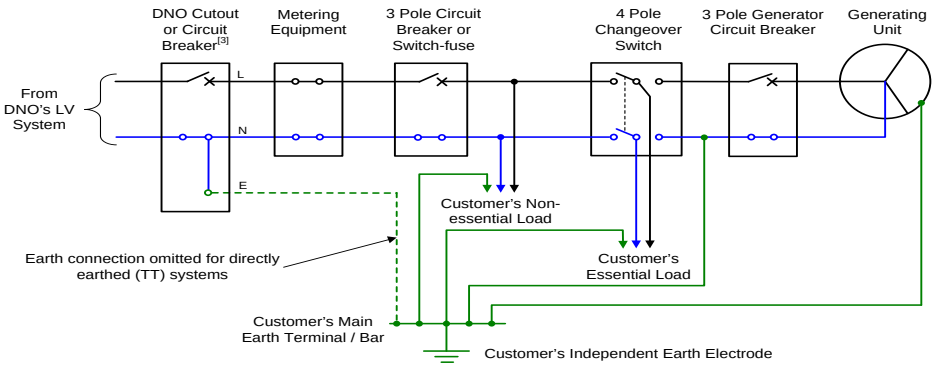

NOTES

(1) Only one phase of a three phase system is shown to aid clarity.

(2) **Generating Unit** is not designed to operate in parallel with the **DNO**s system.

(3) The **DNO** cut-out / circuit breaker shows a PME (TN-C-S) connection, however, the **Generating Unit** earthing arrangement is also applicable to SNE (TNS) and direct earthing (TT) arrangements.

(4) The changeover switch must disconnect each phase and the neutral (ie for a three phase system a 4 pole switch is required). This prevents **Generating Unit** neutral current from inadvertently flowing through the part of the **Customer's System** that is not supported by the **Generating Plant.**

Figure 8.8 - Typical Earthing Arrangement for an **LV Generating Unit** Embedded within a **Customer LV** System and Designed for Parallel Operation Only

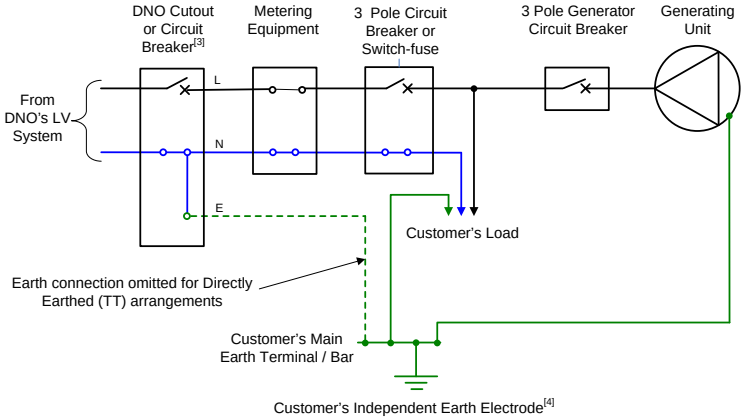

NOTES:

(1) Only one phase of the three phase system is shown to aid clarity.
(2) **Generating Unit** is not designed to operate in standby mode.
(3) The **DNO** cut-out / circuit breaker shows a PME (TN-C-S) connection, however, the **Generating Unit** earthing arrangement is also applicable to SNE (TNS) and direct earthing (TT) arrangements.
(4) The **Customer**'s independent earth electrode is only required if the installation is Directly Earthed (TT).

Formatted: Right

Figure 8.9 - Typical Earthing Arrangement for an **LV Generating Unit** Embedded within a **Customer LV** System and Designed for both Independent Operation (ie Standby Operation) and Parallel Operation**.**

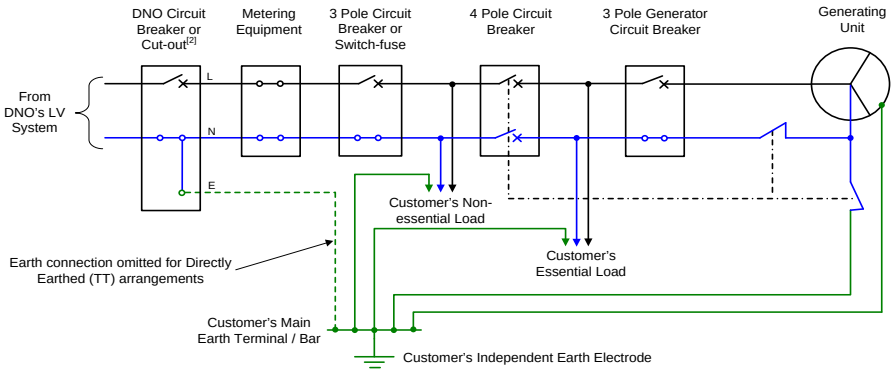

NOTES:

(1) Only one phase of a three phase system is shown to aid clarity.

(2) The **DNO** cut-out / circuit breaker shows a PME (TN-C-S) connection, however, the **Generating Unit** earthing arrangement is also applicable to SNE (TNS) and direct earthing (TT) arrangements.

(3) When the **Generating Plant** operates independently from the DNO's system, the switch that is used to isolate between these two systems must disconnect each phase and neutral (ie for a three phase system a 4 pole switch is required). This prevents **Generating Unit** neutral current from inadvertently flowing through the part of the **Customer's System** that is not supported by the **Generating Plant. This switch should also close the generator neutral and earth switches during independent operation.**

9 NETWORK CONNECTION DESIGN AND OPERATION

9.1 General Criteria

9.1.1 As outlined in Section 5, **DNO**s have to meet certain statutory and **Distribution Licence** obligations when designing and operating their **Distribution System**s. These obligations will influence the options for connecting **Generating Plant**.

9.1.2 The technical and design criteria to be applied in the design of the **Distribution System** and **Generating Plant** connection are detailed within the Distribution Planning and Connection Code (DPC) and the standards listed in Annex 1 of the **Distribution Code**. The criteria are based upon the performance requirements of the **Distribution System** necessary to meet the above obligations.

9.1.3 The **Distribution System**, and any **Generating Plant** connection to that System, shall be designed,

a. to comply with the obligations (to include security, frequency and voltage; voltage disturbances and harmonic distortion; auto reclosing and single phase protection operation).

b. according to design principles in relation to **Distribution System**'s plant and equipment, earthing, voltage regulation and control, and protection as outlined in DPC4, subject to any modification to which the **DNO** may reasonably consent.

9.1.4 **Generating Plant** should meet a set of technical requirements in relation to its performance with respect to frequency and voltage, control capabilities, protection coordination requirements, phase voltage unbalance requirements, neutral earthing provisions, islanding and black start capability. These requirements are listed in DPC7.4 of the **Distribution Code**.

9.1.5 There are additional performance requirements that are specified in the **Grid Code** for all embedded **Medium and Large Power Station**s. The requirements for **Medium Power Station**s are referenced in DPC7.5 of the **Distribution Code**, and are all listed in CC3.3 to CC3.5 of the **Grid Code**.

9.2 Network Connection Design for Generating Plant

9.2.1 The connection of new **Customer**s, including **Generator**s, to the **Distribution System** should not generally increase the risk of interruption to existing Customers. For example, alterations to existing **Distribution System** designs that cause hitherto normally closed circuits to have to run on open standby such that other Customers might become disconnected for the duration of the auto-switching times are deprecated.

Formatted: Right

9.2.2 Connection of **Generating Plant** to 132kV **Distribution System**s may be subject to the requirements of EREC P18. This document sets out the normal limits of complexity of 132kV circuits by stipulating certain restrictions to be applied when they are designed. For example, the operation of protective gear for making dead any 132kV circuit shall not require the opening of more than seven circuit breakers and these circuit breakers shall not be located at more than four different sites. Most **DNO**s will have similar rules for managing the complexity of 66kV and lower voltage **Distribution System**s.

9.2.3 The security requirements for the connection of **Generating Plant** are subject to economic consideration by the **DNO** and the **Generator.** A firm connection for **Generating Plant** should allow the full MVA capacity to be exported via the **Distribution System** at all times of year and after one outage on any one circuit of the **Distribution System**. ETR 124 provides additional advice on the management of constraints and security.

9.2.4 The decision as to whether or not a firm connection is required should be by agreement between the **DNO** and the **Generator**. The **DNO** should be able to provide an indication of the likely duration and magnitude of any constraints so that the **Generator** can make an informed decision. The **Generator** should consider the financial implications of a non-firm connection against the cost of a firm connection, associated **Distribution System** reinforcement and the risk of any constraints due to **Distribution System** restrictions.

9.2.5 Where the **DNO** expects the **Generating Plant** to contribute to system security, the provisions of EREC P2 and the guidance of ETR 130 will apply. In addition, the **Generating Plant** should either remain synchronised and in parallel with the **Distribution System** under the outage condition being considered or be capable of being resynchronised within the time period specified in EREC P2. There may be commercial issues to consider in addition to the connection cost and this may influence the technical method which is used to achieve a desired security of supply.

9.2.6 When designing a scheme to connect **Generating Plant**, consideration must be given to the contribution which that **Generating Plant** will make to short circuit current flows on the **Distribution System**. The assessment of the fault level contribution from **Generating Plant** and the impact on the suitability of connected switchgear are discussed in Section 9.4.

9.2.7 It is clearly important to avoid unwanted tripping of the **Generating Plant**, particularly where the **Generating Plant** is providing **Distribution System** or **Total System** security. The quality of supply and stability of **Generating Plant** performance are dealt with in Sections 9.6 and 9.7 respectively.

9.2.8 **Generating Plant** may be connected via existing circuits to which load and/or existing **Generating Plant** is also connected. The duty on such circuits, including load cycle, real and reactive power flows, and voltage implications on the **Distribution System** will need to be carefully reviewed by the **DNO**, taking account of maximum and minimum load and generation export conditions during system intact conditions and for maintenance outages of both the **Distribution System** and **Generation Plant**. In the event of network limitations, ETR 124 provides guidance to **DNO**s on overcoming such limitations using active management solutions.

9.2.9 A **DNO** assessing a proposed connection of **Generating Plant** must also consider its effects on the **Distribution System** voltage profile and voltage control employed on the **Distribution System**. Voltage limits and control issues are discussed in Section 9.5.

9.3 Generating Plant Performance and Control Requirements

9.3.1 In accordance with DPC7.4.1 of the **Distribution Code**, the rated power output of a **Generating Unit** should not be affected by voltage changes within the statutory limits declared by the **DNO** in accordance with the ESQCR unless otherwise agreed with the **DNO**.

9.3.2 Under abnormal conditions automatic low-frequency load-shedding provides for load reduction down to 47Hz. In exceptional circumstances, the frequency of the **DNO's Distribution System** could rise above 50.5 Hz. Therefore all embedded **Small Power Stations** should be capable of continuing to operate in parallel with the **Distribution System** in accordance with the following:

a. 47 Hz – 47.5 Hz Operation for a period of at least 20 seconds is required each time the frequency is within this range.

b. 47.5 Hz – 51.5 Hz Disconnection by overfrequency or underfrequency protection is not permitted in this range.

c. 51.5 Hz – 52 Hz Operation for a period of at least 90 seconds is required each time the frequency is within this range.

9.3.3 The operational characteristics of the control systems of **Generating Plant** control systems (eg excitation, speed governor, voltage and frequency controls if applicable) must be co-ordinated with other voltage control systems influencing the voltage profile on the **Distribution System**. The **DNO** will provide information on performance requirements in accordance with DPC7.4.2.

9.3.4 Following consultation with the **Generator** and dependent on **Distribution System** voltage studies, a **DNO** will agree the reactive power and voltage control requirements for all **Generating Unit**s that are connected to their **Distribution System**s. It should be noted that the connection to the **Distribution System** may impose restrictions on the capability of **Generation Plant** to operate in accordance with the assumptions of **Grid Code** CC6.3 and the **NETSO** should be advised of any restrictions in accordance with **Grid Code** BC1.6.1. For Embedded **Medium and Large Power Station**s, considerations in Section 9.1.5 apply.

9.3.5 Each item of **Generating Plant** and its associated control equipment must be designed for stable operation in parallel with the **Distribution System**.

9.3.6 Load flow and **System Stability** studies may be necessary to determine any output constraints or post fault actions necessary for n-1 fault conditions and credible n-2 conditions (where n-1 and n-2 conditions are the first and second outage conditions as, for example, specified in EREC P2) involving a mixture of fault and planned outages. The **Connection Agreement** should include details of the relevant outage conditions. It may be necessary under these fault conditions, where the combination of **Generating Plant** output, load and through flow levels leads to circuit overloading, to rapidly disconnect or constrain the **Generating Plant**.

9.3.7 **Type Tested Generating Unit**s Performance Requriements

Type Tested Generating Units should be capable of continuing to operate in parallel with the **Distribution System** as per section 9.2 for non-type tested **Generating Units.** However allowing for tolerances and measurement errors the following test voltages and frequencies at which the tests should be carried out with no trips have been defined. These are shown on the Generating Unit Type test sheet in section 13.1 and described in section 13.8

a. Voltage range:

Maximum Voltage of 258.2V with no time limit, 269.7V for 0.98s and of 277.7V for 0.48s.

Minimum Voltage of 204.1V with no time limit, 188V for 2.48s and 180V for 0.48s

b. Frequency range:

Maximum Frequency 51.3Hz with no time limit, 51.8Hz for 89.98s and 52.2Hz for 0.48s

Minimum frequency 47.7Hz with no time limit, 47.2 Hz for 19.98s and 46.8Hz for 0.48s

c. Rates of Change of Frequency range:

From 50.5Hz to 47.5Hz at 0.19Hz~~ per seconds~~s^{-1} and from 49.5Hz to 51.5Hz at 0.19Hz s^{-1}~~ per second~~.

d. Voltage Vector shift range of:

plus or minus 9 degrees

e. And when operating at rated power shall operate at a power factor within the range 0.95 lagging to 0.95 leading relative to the voltage waveform unless otherwise agreed with the **DNO** eg for power factor improvement. The test to be carried out at three voltage levels.

The tests required to prove satisfactory operation are detailed in section 13.8 and should be recorded on the **Generating Unit** Type Test sheet in section 13.1

Formatted: Right

Formatted: Keep with next

Formatted: Superscript

9.4 Fault Contributions and Switchgear Considerations

9.4.1 Under the ESQCR 2002 and the EaWR 1989 the **Generator** and the **DNO** have legal duties to ensure that their respective systems are capable of withstanding the short circuit currents associated with their own equipment and any infeed from any other connected system.

9.4.2 The **Generator** may accept that protection installed on the **Distribution System** can help discharge some of his legal obligations relating to fault clearance and, if requested, the **DNO** should consider allowing such faults on the **Generator's** system to be detected by **DNO** protection systems and cleared by the **DNO'**s circuit breaker. The **DNO** will not allow the **Generator** to close the **DNO'**s circuit breaker nor to synchronise using the **DNO'**s circuit breaker. In all such cases the exact nature of the protection afforded by the **DNO'**s equipment should be agreed and documented. The **DNO** may make a charge for the provision of this service.

9.4.3 The design and safe operation of the **Generator**'s and the **DNO'**s installation's depend upon accurate assessment of the contribution to the short circuit current made by all the **Generating Plant** operating in parallel with the **Distribution System** at the instant of fault and the **Generator** should discuss this with the **DNO** at the earliest possible stage.

9.4.4 Short circuit current calculations should take account of the contributions from all synchronous and asynchronous infeeds including induction motors and the contribution from inverter connected **Generating Unit**s. The prospective short circuit 'make' and 'break' duties on switchgear should be calculated to ensure that plant is not potentially over-stressed. The maximum short circuit duty might not occur under maximum generation conditions; it may occur during planned or automatic operations carried out either on the **Distribution System** or **Transmission System**. Studies must therefore consider all credible **Distribution System** running arrangements which are likely to increase **Distribution System** short circuit levels. The level of load used in the assessment should reflect committed projects as well as the existing loads declared in the **DNO'**s Long Term Development Statement (LTDS). Guidance on short circuit calculations is given in EREC G74.

9.4.5 The connection of **Generating Plant** can raise the **Distribution System** reactance/resistance (X/R) ratio. In some cases, this will place a more onerous duty on switchgear by prolonging the duration of the DC component of fault current from fault inception. This can increase the proportion of the DC component of the fault current and delay the occurrence of current zeros with respect to voltage zeros during the interruption of fault current. The performance of connected switchgear must be assessed to ensure safe operation of the **Distribution System**. The performance of protection may also be impaired by partial or complete saturation of current transformers resulting from an increase in **Distribution System** X/R ratio.

Formatted: Right

9.4.6 Newly installed protection systems and circuit breakers for **Generating Unit** connections should be designed, specified and operated to account for the possibility of out-of-phase operation. It is expected that the **DNO**'s metering/interface circuit beaker will be specified for this duty, but in the case of existing circuit breakers on the **Distribution System**, the **DNO** will need to establish the possibility or otherwise of the **DNO**s protection (or the **Generator**'s protection if arranged to trip the **DNO**'s circuit breaker) initiating a circuit breaker trip during a period when one of more **Generating Unit**s might have lost **Synchronism** with the **Total System**. Where necessary, switchgear replacement, improved security arrangements and other control measures should be considered to mitigate this risk.

9.4.7 When connection of **Generating Plant** is likely to increase short circuit currents above **Distribution System** design ratings, consideration should be given to the installation of reactors, sectionalising networks, connecting the **Generating Plant** to part of the **Distribution System** operating at a higher voltage, changing the **Generating Unit** specification or other means of limiting short circuit current infeed. If fault limiting measures are not cost effective or feasible or have a material detrimental effect on other users, **Distribution System** plant with the potential to be subjected to short circuit currents in excess of its rating should be replaced or reference made to the relevant manufacturer to determine whether or not the existing plant rating(s) can be enhanced. In situations where **Distribution System** design ratings would be exceeded in infrequent but credible **Distribution System** configurations, then constraining the **Generating Plant** off during periods of such **Distribution System** configurations may provide a suitable solution. When assessing short circuit currents against **Distribution System** design ratings, suitable safety margins should be allowed to cater for tolerances that exist in the **Distribution System** data and **Generating Unit** parameters used in system modelling programs. On request from a **Generator** the **DNO** will provide the rationale for determining the value of a specific margin being used in **Distribution System** studies.

9.4.8 For busbars with three or more direct connections to the rest of the **Total System**, consideration may be given to reducing fault levels by having one of the connections 'open' and on automatic standby. This arrangement will only be acceptable provided that the loss of one of the remaining circuits will not cause the group to come out of **Synchronism**, cause unacceptable voltage excursions or overloading of **Distribution System** or **Transmission System** plant and equipment. The use of the proposed **Generating Plant** to prevent overloading of **Distribution System** plant and equipment should be considered with reference to EREC P2.

9.4.9 Disconnection of **Generating Plant** must be achieved by the separation of mechanical contacts unless the disconnection is at **Low Voltage** and the equipment at the point of disconnection contains appropriate self monitoring of the point of disconnection, in which case an appropriate electronic means such as a suitably rated semiconductor switching device would be acceptable. The self monitoring facility shall incorporate fail safe monitoring to check the voltage level at the output stage. In the event that the solid state switching device fails to disconnect the **Generating Unit**, the voltage on the output side of the switching device shall be reduced to a value below 50V within 0.5s. For the avoidance of doubt this disconnection is a means of providing LoM disconnection and not as a point of isolation to provide a safe system of work.

9.5 Voltage Limits and Control

9.5.1 Where **Generating Plant** is remote from a network voltage control point it may be required to withstand voltages outside the normal statutory limits. In these circumstances, the **DNO** should agree with the **Generator** the declared voltage and voltage range at the **Connection Point**. Immunity of the **Generating Plant** to voltage changes of ± 10% of the declared voltage is recommended, subject to design appraisal of individual installations.

9.5.2 The connection of a **Generating Plant** to the **Distribution System** shall be designed in such a way that operation of the **Generating Plant** does not adversely affect the voltage profile of and voltage control employed on the **Distribution System**. ETR 126 provides **DNO**s with guidance on active management solutions to overcome voltage control limitations.

9.5.3 Where it is agreed that the **Generation Plant** should operate in voltage control (PV) mode or where there is a need to comply with **Grid Code** CCA7.2 when the **Generating Plant** is required to operate to a 'setpoint voltage' and 'slope', the **Generating Plant** will have a specific role to control the **Distribution System** voltage. The final responsibility for control of **Distribution System** voltage does however remain with the **DNO**.

9.5.4 Automatic Voltage Control (AVC) schemes employed by the **DNO** assume that power flows from parts of the **Distribution System** operating at a higher voltage to parts of the **Distribution System** operating at lower voltages. Export from **Generating Plant** in excess of the local loads may result in power flows in the reverse direction. In this case AVC referenced to the low voltage side will not operate correctly without an import of reactive power and relay settings appropriate to this operating condition. When load current compounding is used with the AVC and the penetration level of **Generating Plant** becomes significant compared to normal loads, it may be necessary to switch any compounding out of service.

9.5.5 **Generating Plant** can cause problems if connected to networks employing AVC schemes which use negative reactance compounding and line drop compensation due to changes in active and reactive power flows. ETR 126 provides guidance on connecting generation to such networks using techniques such as removing the generation circuit from the AVC scheme using cancellation CTs.

9.5.6 An agreement between the **DNO** and the **Generator** may allow the use of voltage control techniques other than those previously mentioned. Such an agreement would normally be reached during the negotiating stage of the connection.

9.5.7 The **Step Voltage Change** caused by the connection and disconnection of **Generating Plant** from the **Distribution System** must be considered and be subject to limits to avoid unacceptable voltage changes being experienced by other **Customers** connected to the **Distribution System**. The magnitude of a **Step Voltage Change** depends on the method of voltage control, types of load connected and the presence of local generation.

Formatted: Right

Typical limits for **Step Voltage Change** caused by the connection and disconnection of any **Customers** equipment to the **Distribution System** should be ± 3% for infrequent planned switching events or outages in accordance with EREC P28. For unplanned outages such faults it will generally be acceptable to design to a **Step Voltage Change** of ±10%. The **Distribution Code** makes allowances for these events in DPC4.

9.5.8 The voltage depression arising from transformer magnetising inrush current is a short-time phenomenon not generally easily captured by the definition of **Step Voltage Change** used in this document. In addition the size of the depression is dependent on the point on wave of switching and the duration of the depression is relatively short in that the voltage recovers substantially in less than one second.

9.5.9 **Customer Installation**s should be designed such that transformer magnetising inrush current associated with normal routine switching operations does not cause voltage fluctuations outside those in EREC P28 (ie a maximum of ±3%). To achieve this it may be necessary to install switchgear so that sites containing multiple transformers can be energised in stages.

9.5.10 Situations will arise from time to time when complete sites including a significant presence of transformers are energised as a result of post fault switching, post fault maintenance switching, carrying out commissioning tests on **Distribution System** or on the **Customer**'s system. In these situations it will generally be acceptable to design to an expected depression of around 10% recognising that a worst case energisation might be a larger depression, on the basis that such events are considered to be rare and it is difficult to predict the exact depression because of the point on wave switching uncertainty. Should these switching events become more frequent than once per year then the design should revert to aiming to limit depressions to less than 3%.

9.5.11 These threshold limits should be complied with at the **Point of Common Coupling** as required by EREC P28.

9.6 Power Quality

9.6.1 Introduction

The connection and operation of **Generating Plant** may cause a distortion of the **Distribution System** voltage waveform resulting in voltage fluctuations, harmonics or phase voltage unbalance. DPC4.2.3 of the **Distribution Code** sets the limits on voltage disturbances and harmonic distortion; DPC7.4.4 sets phase voltage unbalance requirement that any **Generating Plant** connected to the **Distribution System** would need to comply with.

9.6.2 Flicker

Where the input motive power of the **Generating Plant** may vary rapidly, causing corresponding changes in the output power, flicker may result. The operation of **Generating Plant** including synchronisation, run-up and desynchronisation shall not result in flicker that breaches the limits for flicker in EREC P28.

The fault level of the **Distribution System** needs to be considered to ensure that the emissions produced by the **Generating Plant** do not cause a problem on the **Distribution System**. For **Type Tested Generating Unit**s of up to 17kW per phase or 50kW three phase voltage step change and flicker measurements as required by BS EN 61000-3-11 shall be made and recorded in the type test declaration for the **Generating Unit**.

The **DNO** will use these declared figures to calculate the required maximum supply impedance required for the connection to comply with EREC P28. This calculation may show that the voltage fluctuations will be greater than those permitted and hence reinforcement of the **Distribution System** may be required before the **Generating Plant** can be connected.

9.6.2.1 For wind turbines, flicker testing should be carried out during the performance tests specified in IEC 61400-12. Flicker data should be recorded from wind speeds of $1ms^{-1}$ below cut-in to 1.5 times 85% of the rated power. The wind speed range should be divided into contiguous bins of $1ms^{-1}$ centred on multiples of $1ms^{-1}$. The dataset shall be considered complete when each bin includes a minimum of 10 minutes of sampled data.
The highest recorded values across the whole range of measurements should be used as inputs to the calculations described in BS EN 61000-3-11 to remove back ground flicker values. Then the required maximum supply impedance values can be calculated as described in 13.1. Note that occasional very high values may be due to faults on the associated HV network and may be discounted, though care should be taken to avoid discounting values which appear regularly.

9.6.2.2 For technologies other than wind, the controls or automatic programs used shall produce the most unfavourable sequence of voltage changes for the purposes of the test.

9.6.3 Harmonic Emissions

Harmonic voltages and currents produced within the **Generator**'s **System** may cause excessive harmonic voltage distortion in the **Distribution System**. The **Generator**'s installation must be designed and operated to comply with the planning criteria for harmonic voltage distortion as specified in EREC G5. EREC G5, like all planning standards referenced in this recommendation, is applicable at the time of connection of additional equipment to a **Customer**'s **Installation**.

For **Type Tested Generating Unit**s of up to 17kW per phase or 50kW three phase harmonic measurements as required by BS EN 61000-3-12 shall be made and recorded in the type test declaration for the **Generating Unit**.

The **DNO** will use these declared figures to calculate the required maximum supply impedance required for the connection to comply with BS EN 61000-3-12 and will use this data in their design of the connection for the **Generating Unit**. This standard requires a minimum ratio between source fault level and the size of the **Generating Unit**, and connections in some cases may require the installation of a transformer between 2 and 4 times the rating of the **Generating Unit** in order to accept the connection to a **DNO's System.**

Alternatively, if the harmonic emissions are low and they are shown to meet the requirements of BS EN 61000-3-2 then there will be no need to carry out the

Formatted: Right

fault level to **Generating Unit** size ratio check. **Generating Unit**s meeting the requirements of BS EN 61000-3-2 will need no further assessment with regards to harmonics.

9.6.4 Where the **Generating Plant** is connected via a long cable circuit the likelihood of a resonant condition is greatly increased, especially at 132kV. This arises from the reaction of the transformer inductance with the cable capacitance. Resonance is likely in the low multiples of the fundamental frequency (8th-11th harmonic). The resonant frequency is also a function of the **Total System** fault level. If there is the possibility that this can change significantly eg by the connection of another **Generating Plant**, then a full harmonic study should be carried out.

9.6.5 Voltage imbalance

EREC P29 is a planning standard which sets the **Distribution System** compatibility levels for voltage unbalance caused by uneven loading of three phase supply systems. **Generating Unit**s should be capable of performing satisfactorily under the conditions it defines. The existing voltage unbalance on an urban **Distribution System** rarely exceeds 0.5% but higher levels, in excess of 1%, may be experienced at times of high load and when outages occur at voltage levels above 11kV. 1% may exist continuously due to unbalance of the system impedance (common on remote rural networks). In addition account can be taken of the neutralising effect of rotating plant, particularly at 11 kV and below.

9.6.6 The level of voltage unbalance at the **Point of Common Coupling** should be no greater than 1.3% for systems with a nominal voltage below 33kV, or 1% for other systems with a nominal voltage no greater than 132kV. Overall, voltage unbalance should not exceed 2% when assessed over any one minute period. EREC P29, like all planning standards, is applicable at the time of connection.

9.6.6.1 For **Power Stations** of 50kW or less section 7.5 of this document specifies maximum unbalance of **Generating Units**. Where these requirements are met then no further action is required by the **Generator**.

9.6.7 Power factor correction equipment is sometimes used with asynchronous **Generating Unit**s to decrease reactive power flows on the **Distribution System**. Where the power factor correction equipment is of a fixed output, stable operating conditions in the event of loss of the **DNO** supply are extremely unlikely to be maintained, and therefore no special protective actions are required in addition to the standard protection specified in this document.

9.6.8 DC Injection

The effects of, and therefore limits for, DC currents injected into the **Distribution System** is an area currently under investigation by **DNO**s. Until these investigations are concluded the limit for DC injection is less than 0.25% of the AC rating per **Generating Unit**.

The main source of these emissions are from transformer-less **Inverters**. Where necessary DC emission requirements can be satisfied by installing a transformer on the AC side of an **Inverter**.

9.7 System Stability

9.7.1 Instability in **Distribution System**s may result in unacceptable quality of supply and tripping of **Customer**'s plant. In severe cases, instability may cascade across the **Distribution System**, resulting in widespread tripping and loss of demand and generation. There is also a risk of damage to plant.

9.7.2 In general, **System Stability** is an important consideration in the design of **Generating Plant** connections to the **Distribution System** at 33kV and above. Stability considerations may also be appropriate for some **Generating Plant** connections at lower voltages. The risks of instability generally increase as **Generating Plant** capacity increases relative to the fault level infeed from the **Distribution System** at the **Connection Point**.

9.7.3 **System Stability** may be classified into several forms, according firstly to the main system variable in which instability can be observed, and secondly to the size of the system disturbance. In **Distribution System**s, the forms of stability of interest are rotor angle stability and voltage stability.

Rotor angle stability refers to the ability of synchronous machines in an interconnected system to remain in synchronism after the system is subjected to a disturbance.

Voltage stability refers to the ability of a system to maintain acceptable voltages throughout the system after being subjected to a disturbance.

9.7.4 Both rotor angle stability and voltage stability can be further classified according to the size of the disturbance.

Small-disturbance stability refers to the ability of a system to maintain stability after being subjected to small disturbances such as small changes in load, operating points of **Generating Unit**s, transformer tap-changing or other normal switching events.

Large-disturbance stability refers to the ability of a system to maintain stability after being subjected to large disturbances such as short-circuit faults or sudden loss of circuits or **Generating Unit**s.

9.7.5 Traditionally, large-disturbance rotor angle stability (also referred to as transient stability) has been the form of stability predominantly of interest in **Distribution System**s with synchronous machines. However, it should be noted that the other forms of stability may also be important and may require consideration in some cases.

9.7.6 It is recommended that **Generating Plant** and its connection to the **Distribution System** be designed to maintain stability of the **Distribution System** for a defined range of initial operating conditions and a defined set of system disturbances.

The range of initial operating conditions should be based on those which are reasonably likely to occur over a year of operation. Variables to consider include system loads, system voltages, system outages and configurations, and **Generating Plant** operating conditions.

Formatted: Right

The system disturbances for which stability should be maintained should be selected on the basis that they have a reasonably high probability of occurrence. It is recommended that these include short-circuit faults on single **Distribution System** circuits (such as transformers, overhead lines and cables) and busbars, that are quickly cleared by main protection.

It should be noted that it is impractical and uneconomical to design for stability in all circumstances. This may include double circuit fault outages and faults that are cleared by slow protection. **Generating Unit**s that become unstable following system disturbances should be disconnected as soon as possible.

9.7.7 Various measures may be used, where reasonably practicable, to prevent or mitigate system instability. These may include **Distribution System** and **Generating Plant** solutions, such as:

- improved fault clearance times by means of faster protection;
- improved performance of **Generating Plant** control systems (excitation and governor/prime mover control systems; **Power System Stabilisers** to improve damping);
- improved system voltage support (provision from either **Generating Plant** or **Distribution System** plant);
- reduced plant reactance's (if possible);
- Protection to identify pole-slipping;
- increased fault level infeed from the **Distribution System** at the **Connection Point**.

In determining mitigation measures which are reasonably practicable, due consideration should be given to the cost of implementing the measures and the benefits to the **Distribution System** and **Customer**s in terms of reduced risk of system instability.

9.8 Island Mode

9.8.1 A fault or planned outage, which results in the disconnection of a **Generating Unit**, together with an associated section of **Distribution System**, from the remainder of the **Total System**, creates the potential for island mode operation. The key potential advantage of operating in Island Mode is to maintain continuity of supply to the portion of the **Distribution System** containing the **Generating Unit**. The principles discussed in this section generally also apply where **Generation Plant** on a **Customer**'s site is designed to maintain supplies to that site in the event of a failure of the **DNO** supply.

9.8.2 When considering whether **Generating Plant** can be permitted to operate in island mode, detailed studies need to be undertaken to ensure that the islanded system will remain stable and comply with all statutory obligations and relevant planning standards when separated from the remainder of the **Total System**. Before operation in island mode can be allowed, a contractual agreement between the **DNO** and **Generator** must be in place and the legal liabilities associated with such operation must be carefully considered by the **DNO** and the **Generator**. Consideration should be given to the following areas:

a. load flows, voltage regulation, frequency regulation, voltage unbalance, voltage flicker and harmonic voltage distortion;

b. earthing arrangements;

c. short circuit currents and the adequacy of protection arrangements;

d. **System Stability**;

e. resynchronisation to the **Total System**;

f. safety of personnel.

9.8.3 Suitable equipment will need to be installed to detect that an island situation has occurred and an intertripping scheme is preferred to provide absolute discrimination at the time of the event. Confirmation that a section of **Distribution System** is operating in island mode, and has been disconnected from the **Total System**, will need to be transmitted to the **Generating Unit(s)** protection and control schemes.

9.8.4 The ESQCR requires that supplies to **Customers** are maintained within statutory limits at all times ie when they are supplied normally and when operating in island mode. Detailed system studies including the capability of the **Generating Plant** and its control / protections systems will be required to determine the capability of the **Generating Plant** to meet these requirements immediately as the island is created and for the duration of the island mode operation.

9.8.5 The ESQCR also require that **Distribution System**s are earthed at all times. **Generator**s, who are not permitted to operate their installations and plant with an earthed star-point when in parallel with the **Distribution System**, must provide an earthing transformer or switched star-point earth for the purpose of maintaining an earth on the system when islanding occurs. The design of the earthing system that will exist during island mode operation should be carefully considered to ensure statutory obligations are met and that safety of the **Distribution System** to all users is maintained. Further details are provided in Section 8.

9.8.6 Detailed consideration must be given to ensure that protection arrangements are adequate to satisfactorily clear the full range of potential faults within the islanded system taking into account the reduced fault currents and potential longer clearance times that are likely to be associated with an islanded system.

9.8.7 Switchgear shall be rated to withstand the voltages which may exist across open contacts under islanded conditions. The **DNO** may require interlocking and isolation of its circuit breaker(s) to prevent out-of-phase voltages occurring across the open contacts of its switchgear. Intertripping or interlocking should be agreed between the **DNO** and the **Generator** where appropriate.

9.8.8 It will generally not be permissible to interrupt supplies to **DNO Customers** for the purposes of resynchronisation. The design of the islanded system must ensure that synchronising facilities are provided at the point of isolation between the islanded network and the **DNO** supply. Specific arrangements for this should be agreed and recorded in the **Connection Agreement** with the **DNO**.

Formatted: Right

10 PROTECTION

10.1 General

10.1.1 The main function of the protection systems and settings described in this document is to prevent the **Generating Plant** supporting an islanded section of the **Distribution System** when it would or could pose a hazard to the **Distribution System** or **Customers** connected to it. The settings recognize the need to avoid nuisance tripping and therefore require a two stage approach where practicable, ie to have a long time delay for smaller excursions that may be experienced during normal **Distribution System** operation, to avoid nuisance tripping, but with a faster trip for greater excursions.

10.1.2 In accordance with established practice it is for the **Generator** to install, own and maintain this protection. The **Generator** can therefore determine the approach, ie per **Generating Unit** or per installation, and where in the installation the protection is sited.

Where a common protection system is used to provide the protection function for multiple **Generation Unit**s the complete installation cannot be considered to comprise **Type Tested Generating Unit**s as the protection and connections are made up on site and so cannot be factory tested or **Type Tested**.

10.1.3 In exceptional circumstance additional protection may be required by the **DNO** to protect the **Distribution System** from the **Generating Plant**.

10.2 Protection Requirements

10.2.1 The basic requirements for protection are laid out in DPC7.4 of the **Distribution Code**. The requirements of EREC G59 are as follows:-

- UnderVoltage (2 stage);
- OverVoltage (2 stage);
- UnderFrequency (2 stage);
- OverFrequency (2 stage);
- Loss of Mains (LoM).

The LoM protection will depend for its operation on the detection of some suitable parameter, for example, rate of change of frequency (RoCoF), phase angle change or unbalanced voltages. More details on LoM protection are given in Section 10.3.

It is in the interest of **Generators**, **DNO**s and **NETSO** that **Generating Plant** remains synchronised to the **Distribution System** during system disturbances, and conversely to disconnect reliably for true LoM situations. Frequency and voltage excursions less than the protection settings should not cause protection operation. As some forms of LoM protection might not readily achieve the required level of performance (eg under balanced load conditions), the preferred method for **Medium Power Station**s and **Large Power Station**s is by means of intertripping. This does not preclude consideration of other methods that may be more appropriate for a particular connection.

10.2.2 The protective equipment, provided by the **Generator**, to meet the requirements of this section must be installed in a suitable location that affords visual inspection of the protection settings and trip flags and is secure from interference by unauthorised personnel.

10.2.3 If automatic resetting of the protective equipment is used, there must be a time delay to ensure that healthy supply conditions exist for a minimum continuous period of 20s. Reset times may need to be co-ordinated where more than one **Generating Plant** is connected to the same feeder. The automatic reset must be inhibited for faults on the **Generator**'s installation.

10.2.4 Protection equipment is required to function correctly within the environment in which it is placed and shall satisfy the following standards:

- BS EN 61000 (Electromagnetic Standards)
- BS EN 60255 (Electrical Relays);
- BS EN 61810 (Electrical Elementary Relays);
- BS EN 60947 (Low Voltage Switchgear and Control gear);
- BS EN 60044 (Instrument Transformers).

Where these standards have more than one part, the requirements of all such parts shall be satisfied, so far as they are applicable.

10.2.5 Protection equipment and protection functions may be installed within, or form part of the generator control equipment as long as:

a. the control equipment satisfies all the requirements of Section 10 including the relevant standards specified in 10.2.4.

b. the **Generating Plant** shuts down in a controlled and safe manner should there be an equipment failure that affects both the protection and control functionality, for example a power supply failure or microprocessor failure.

c. the equipment is designed and installed so that protection calibration and functional tests can be carried out easily and safely using secondary injection techniques (ie using separate low voltage test equipment). This is not a requirement for **Type Tested Generating Units**.

d. a **Type Tested Generating Unit**'s **Interface Protection** must not rely on interconnection using cables which could be terminated incorrectly on site ie the interconnections must be made by plug and socket which the **Manufacturer** has made and tested prior to delivery to site.

10.3 Loss of Mains (LoM)

10.3.1 To achieve the objectives of Section 10.1.1, in addition to protection installed by the **Generator** for his own purposes, the **Generator** must install protection to achieve (amongst other things) disconnection of the **Generating Plant** from the **Distribution System** in the event of loss of one or more phases of the **DNO**s supply. This LoM protection is required to ensure that the Generating Plant is disconnected, to ensure that the requirements for **Distribution System** earthing, and out-of-**Synchronism** closure are complied with and that **Customers** are not supplied with voltage and frequencies outside statutory limits.

Formatted: Right

10.3.2 LoM is mandatory for all **Small Power Stations**. For **Medium and Large Power Stations** the **DNO** will advise if LoM is required. The requirements of 10.5.2 apply to LoM protection for all **Power Stations**.

10.3.3 A problem can arise for **Generator**s who operate **Generating Plant** in parallel with the **Distribution System** prior to a failure of the network supply because if their **Generating Plant** continues to operate in some manner, even for a relatively short period of time, there is a risk that when the network supply is restored the **Generating Plant** will be out of **Synchronism** with the **Total System** and suffer damage. LoM protection can be employed to disconnect the **Generating Plant** immediately after the supply is lost, thereby avoiding damage to the **Generating Plant**.

10.3.4 Many **Customers** are connected to parts of **Distribution System**s which will be automatically re-energised within a relatively short period following a fault; with dead times typically between 1s and 180s. The use of such schemes is likely to increase in future as **DNO**s seek to improve supply availability by installing automatic switching equipment on their **Distribution System**s.

10.3.5 Where the amount of **Distribution System** load that the **Generating Plant** will attempt to pick up following a fault on the **Distribution System** is significantly more than its capability the **Generating Plant** will rapidly disconnect, or stall. However depending on the exact conditions at the time of the **Distribution System** failure, there may or may not be a sufficient change of load on the **Generating Plant** to be able to reliably detect the failure. The **Distribution System** failure may result in one of the following load conditions being experienced by the **Generating Plant**:

a. The load may slightly increase or reduce, but remain within the capability of the **Generating Plant**. There may even be no change of load;

b. The load may increase above the capability of the prime mover, in which case the **Generating Plant** will slow down, even though the alternator may maintain voltage and current within its capacity. This condition of speed/frequency reduction can be easily detected; or

c. The load may increase to several times the capability of the **Generating Plant**, in which case the following easily detectable conditions will occur:

- Overload and accompanying speed/frequency reduction
- Over current and under voltage on the alternator

10.3.6 Conditions (b) and (c) are easily detected by the under and over voltage and frequency protection required in this document. However Condition (a) presents most difficulty, particularly if the load change is extremely small and therefore there is a possibility that part of the **Distribution System** supply being supplied by the **Generating Plant** will be out of **Synchronism** with the **Total System**. LoM protection is designed to detect these conditions. In some particularly critical circumstances it may be necessary to improve the dependability of LoM detection by using at least two LoM techniques operating with different principles or by employing a LoM relay using active methods.

10.3.7 LoM signals can also be provided by means of intertripping signals from circuit breakers that have operated in response to the **Distribution System** fault.

10.3.8 The LoM protection can utilise one or a combination of the passive protection principles such as reverse power flow, reverse reactive power, rate of change of frequency (RoCoF) and voltage vector phase shift. Alternatively, active methods such as reactive export error detection or frequency shifting may be employed. These may be arranged to trip the interface circuit breaker at the **DNO Generator** interface, thus, leaving the **Generating Plant** available to satisfy the load requirements of the site or the **Generating Plant** circuit breaker can be tripped, leaving the breaker at the interface closed and ready to resume supply when the **Distribution System** supply is restored. The most appropriate arrangement is subject to agreement between the **DNO** and **Generator**.

10.3.9 Protection based on measurement of reverse flow of real or reactive power can be used when circumstances permit and must be set to suit the **Generating Plant** rating, the site load conditions and requirements for reactive power.

10.3.10 Where the **Generating Plant** capacity is such that the site will always import power from the **Distribution System**, a reverse power relay may be used to detect failure of the supply. It will usually be appropriate to monitor all three phases for reverse power.

10.3.11 However, where the **Generating Plant**s normal mode of operation is to export power, it is not possible to use a reverse power relay and consequently failure of the supply cannot be detected by measurement of reverse power flow. The protection should then be specifically designed to detect loss of the mains connection using techniques to detect the rate of change of frequency or sudden phase shifts of voltage vector and/or power factor. All these techniques are susceptible to **Distribution System** conditions and the changes that occur without islanding taking place. These relays must be set to prevent islanding but with the best possible immunity to unwanted nuisance operation.

10.3.12 Both RoCoF and vector phase shift relays use a measurement of the period of the mains voltage cycle. The RoCoF technique measures the rate of change in frequency caused by any difference between prime mover power and electrical output power of the embedded **Generating Plant** over a number of cycles. RoCoF relays should normally ignore the slow changes but respond to relatively rapid changes of frequency which occur when the **Generation Plant** becomes disconnected from the **Total System**. The voltage vector shift technique tries to detect the shift in the voltage vector caused by a sudden change in the output of **Generating Plant** or load over one or two cycles (or half cycles). ~~The main advantage of a vector shift relays is its speed and response to transient disturbances which are common to the onset of islanding but often difficult to quantify. Speed of response is also very important where high speed auto reclosing schemes are present.~~~~Recent~~ Investigations in early 2017 have shown that vector shift protection is susceptible to spurious operation during voltage disturbances caused by faults on the transmission system and is less effective at detecting islands on the **Distribution System**; therefore from ~~[01/12/17~~01/02/18~~]~~ no new vector shift protection relays can be installed. Opportuniies should taken to reduce the system risk associated with vector shift protection and any material alteration to an existing installation should include removing vector shift protection and replacing with an alterntive loss of mains protection, such as RoCoF, in accordance with section 10.5.7. Similarly from ~~[01/12/17~~01/02/18~~]~~, RoCoF protection applied via a multifunctional relay must not be replaced by a vector shift setting.

10.3.13 Frequency variations are a constant feature of any AC electrical network. During normal operation of the system NGET maintains frequency within the statutory limits of 49.5Hz to 50.5Hz. However the loss of a large generation infeed, or a large block of load, may disturb the system such that it goes outside statutory limits for a short period. It is important that unnecessary Loss of Mains protection operation does not occur during these short lived excursions. The changing mix of generation and loads on the GB network has already resulted in a wider range of possible system rate of change of frequency (RoCoF) during these events. This wider range of RoCoF could exceed the expectations set out in previous versions of EREC G59 and system RoCoF events above 0.125Hzs^{-1} have already been measured on the GB network. With the changes in generation mix expected over the next decade it is unlikely to be economic to contain all frequency excursions within 0.125Hzs^{-1}. Therefore the maximum system RoCoF which may be experienced for the maximum loss of generation infeed or block of load will rise over time. Studies indicate that by 2023 this may be as high as 0.5Hzs^{-1}, and that even higher levels may be experienced after 2023. The RoCoF settings ~~for Power Stations of 5MW or more~~ laid out in EREC G59/3-~~2~~ 3 are intended to strike an appropriate balance between the need to detect genuine island conditions and the risk of unnecessary operation for the system conditions anticipated.

10.3.14 The LoM relay that operates on the principle of voltage vector shift can achieve fast disconnection for close up **Distribution System** faults and power surges, and under appropriate conditions can also detect islanding when normally a large step change in generation occurs. The relay measures the period for each half cycle in degrees and compares it with the previous one to determine if this exceeds its setting. A typical setting of 6 degrees has been historically applied as this was thought to be~~A typical setting is 6 degrees, which is normally~~ appropriate to avoid operation for most normal vector changes in low impedance **Distribution System**s. This equates to a constant rate of change of frequency of about 1.67 Hzs^{-1}and hence the relay is insensitive to slow rates of change of frequency. When vector shift relays are used in higher impedance **Distribution System**s, and especially on rural **Distribution System**s where auto-reclosing systems are used, a higher setting may be required to prevent nuisance tripping. Typically this is between 10 and 12 degrees. In order to provide a consistant value for application to **Type Tested Generating Unit**s, a value of 12 degrees, and a no-trip test of 9 degrees have been introduced for **Type Tested Generating Units**. Note that no vector shift protection will be allowed for **Generating Units** commissioned on or after ~~01 March 2018~~01 Feb 2018, nor will it be allowed to be retrofitted to **Generating Units** commissioned before this date.

10.3.15 RoCoF protection is generally only applicable for **Small Power Station**s. DPC7.4 in the **Distribution Code** details where RoCoF may be used, and what the differences are between Scotland and England and Wales.

Formatted: Right

Formatted: Font: (Default) Arial

Formatted: Font: (Default) Arial

Formatted: Font: Bold

Formatted: Font: Bold

10.3.16 Raising settings on any relay to avoid spurious operation may reduce a relay's capability to detect islanding and it is important to evaluate fully such changes. Appendix 13.6 provides some guidance for assessments, which assume that during a short period of islanding the trapped load is unchanged. In some circumstances it may be necessary to employ a different technique, or a combination of techniques to satisfy the conflicting requirements of safety and avoidance of nuisance tripping. In those cases where the **DNO** requires LoM protection this must be provided by a means not susceptible to spurious or nuisance tripping, eg intertripping. Protection settings for **Type Tested Generating Unit**s shall not be changed from the standard settings defined in this Engineering Recommednation.

10.3.17 For a radial or simple **Distribution System** controlled by circuit breakers that would clearly disconnect the entire circuit and associated **Generating Plant**, for a LoM event an intertripping scheme can be easy to design and install. For meshed or ring **Distribution System**s, it can be difficult to define which circuit breakers may need to be incorporated in an intertripping scheme to detect a LoM event and the inherent risks associated with a complex system should be considered alongside those associated with a using simple, but potentially less discriminatory LoM relay.

10.3.18 It is the responsibility of the **Generator** to incorporate the most appropriate technique or combination of techniques to detect a LoM event in his protection systems. This will be based on knowledge of the **Generating Unit,** site and network load conditions. The **DNO** will assist in the decision making process by providing information on the **Distribution System** and its loads. The technique and settings applied must be biased to ensure detection of islanding under all operating conditions as far as is reasonably practicable. ~~More detailed guidance on how **Generators** can assess the risks and on the information that the **DNO** will provide is containedin Appendix 13.11~~

10.4 Additional DNO Protection

Following the **DNO** connection study, the risk presented to the **Distribution System** by the connection of a **Generating Unit** may require additional protection to be installed and may include the detection of:

- Neutral Voltage Displacement (NVD);
- Over Current;
- Earth Fault;
- Reverse Power.

This protection will normally be installed on equipment owned by the **DNO** unless otherwise agreed between the **DNO** and **Generator**. This additional protection may be installed and arranged to operate the **DNO** interface circuit breaker or any other circuit breakers, subject to the agreement of the **DNO** and the **Generator**.

The requirement for additional protection will be determined by each **DNO** according to size of **Generating Unit**, point of connection, network design and planning policy. This is outside the scope of this document.

When intertripping is considered to be a practical alternative, for detecting a LoM event, to using discriminating protection relays, the intertripping equipment would be installed by the **DNO**.

Formatted: Right

10.4.1 Neutral Voltage Displacement (NVD) Protection

Section 9.8.6 states that the **DNO** will undertake detailed consideration to ensure that protection arrangements are adequate to satisfactorily clear the full range of potential faults within an islanded system.

Section 10.3 describes LoM protection which the **Generator** must install to achieve (amongst other things) disconnection of the **Generating Plant** from the **Distribution System** in the event of loss of one or more phases of the **DNO**s supply.

Where **Generating Plant** inadvertently operates in island mode, and where there is an earth fault existing on the **DNO**s **HV System** NVD protection fitted on the **DNO**s **HV** switchgear will detect the earth fault, and disconnect the **HV System** from the island.

DNOs need to consider specific investigation of the need for NVD protection when, downstream of the same prospective island boundary, there are one or more **Generating Unit**s (with an output greater than 200kVA per unit) having the enabled capacity to dynamically alter real and reactive power output in order to maintain voltage profiles, and where such aggregate embedded generation output exceeds 50% of prospective island minimum demand.

10.4.2 As a general rule for generation installations connected at 20kV or lower voltages **DNO**s will not require NVD protection for the following circumstances:

- Single new **Generating Unit** connection, of any type with an output less than 200kVA;
- Multiple new **Generating Unit** connections, of any type, on a single site, with an aggregated output less than 200kVA;
- Single or multiple new **Generating Unit** connections, of any type, where the voltage control is disabled or not fitted, on a single site, and where the aggregate output is greater than 200kVA ;
- Single or multiple new **Generating Unit** connections, of any type, and where the voltage control is enabled, on a single site, where the aggregate output is greater than 200kVA, but where the aggregate output is less than 50% of the prospective island minimum demand.

It should be noted that above is a “general rule”; each **DNOs** will have differing network designs and so decision will be made by **DNO** according to to size of **Generating Unit**, point of connection, network design and planning policy. This is outside the scope of this document.

10.4.3 If the assessed minimum load on a prospective island is less than twice the maximum combined output of new **Generating Plant** consideration should be given to use of NVD protection as a part of the interface protection. The consideration should include an assessment of:

a. The specification of capability of the LoM protection, including the provision of multiple independent detection techniques;

b. The influence of activation of pre-existing NVD protection already present elsewhere on the same prospective island;

c. The opportunity arising from asset change/addition associated with the proposed new Generating Plant connection eg the margin of additional cost associated with NVD protection.

10.5 Protection Settings

The following notes aim to explain the settings requirements as given in Section 10.5.7.1 below.

10.5.1 The protection systems and settings can have an impact on the behaviour of **Generating Plant** when the **Total System** is in distress. Where **Generating Plant** has the capability to operate at the extremes of the possible operating range of the **Total System**, it would be inappropriate to artificially impose protection settings that would cause **Generating Plant** to be disconnected where it would otherwise be capable of remaining connected and help to maintain the integrity of the **Total System**. It is not the intention that this Section specifies the performance requirements of **Generating Plant** connected to **Distribution System**s, only that protection settings do not aggravate the stress on the **Total System** by tripping before there is a definite need in those circumstances. (For **Medium Power Station**s and **Large Power Station**s, performance requirements are specified in the **Grid Code**). For **Type Tested Generating Units** there are –performance requirements and these are specified in section 9.3.7. For separate protection relays these must ride through both RoCoF and vector shift stability tests as specified in section 10.5.8.

10.5.2 A LoM protection of the RoCoF ~~or vector shift~~ type will generally be appropriate for **Small Power Station**s, but this type of LoM protection must not be installed for **Power Station**s at or above 50 MW. In those cases where the **DNO** requires LoM protection this must be provided by a means not susceptible to spurious or nuisance tripping, eg intertripping. ~~See note in section 10.3.13 about the future long term unsuitability of RoCoF protection.~~

10.5.3 Under Voltage

In order to help maintain **Total System Stability**, the protection settings should be such as to facilitate fault ride through capability, especially for larger **Generating Unit**s (except where local auto-reclose dead times are 1s or less as a reclose on to a fault is more likely to destabilise generation that is still recovering stability from the first fault). The overall aim is to ensure that **Generating Plant** is not disconnected from the **Distribution System** unless there is material disturbance on the **Distribution System**, as disconnecting generation unnecessarily will tend to make an under voltage situation worse. To that end, for all **LV** and **HV** connected **Generating Plant** a 2-Stage under voltage protection should be applied as follows:

- Stage 1 should have a setting of -13% (ie 10% to cater for a future **LV** statutory voltage limit and an additional 3% to provide immunity from 3% **Step Voltage Change**s permitted under EREC P28) and a time delay of 2.5s.

Formatted: Right

- Stage 2 should have a setting of –20% (ie to detect a major **Distribution System** disturbance), with a time delay of 0.5s.

The **Grid Code** calls for fault-ride through capability for **Medium Power Stations** and **Large Power Stations** as there is a more material requirement for such **Generating Unit**s to remain connected to the **Distribution System** save in exceptional circumstances. In this case a single stage with a permitted time delay of 2.5s and a setting of –20% should be applied[6].

10.5.4 Over Voltage

Over voltages are potentially more dangerous than under voltages and hence the acceptable excursions from the norm are smaller and time delays shorter, a 2-Stage over voltage protection[7] is to be applied as follows:

- Stage 1 (**LV**) should have a setting of +14% (ie the **LV** statutory upper voltage limit of +10%,with a further 4% permitted for voltage rise internal to the **Customer**'s installation and measurement errors),with a time delay of 1.0s (to avoid nuisance tripping for short duration excursions);

- Stage 2 (**LV**) should have a setting of +19% with a time delay of 0.5s (ie recognising the need to disconnect quickly for a material excursion);

- Stage 1 (**HV**) should have a setting of +10% with a time delay of 1.0s (ie the **HV** statutory upper voltage limit of +6%,with a further 4% permitted for voltage rise internal to the **Customers Installation** and measurement errors),, with a time delay of 1.0s to avoid nuisance tripping for short duration excursions);

- Stage 2 (**HV**) should have a setting of +13% with a time delay of 0.5s (ie recognising the need to disconnect quickly for a material excursion).

To achieve high utilisation and **Distribution System** efficiency, it is common for the **HV Distribution System** to be normally operated near to the upper statutory voltage limits. The presence of **Generating Plant** within such **Distribution System**s may increase the risk of the statutory limit being exceeded, eg when the **Distribution System** is operating abnormally. In such cases the **DNO** may specify additional over voltage protection at the **Generating Plant** connection point. This protection will typically have an operating time delay long enough to permit the correction of transient over voltages by automatic tap-changers.

[6] Grid Code CC6.3 provides further details.

[7] Over Voltage Protection is not intended to maintain statutory voltages but to detect islanding

10.5.5 Over Frequency

The **Grid Code** incorporates a requirement for **Medium Power Station**s and **Large Power Station**s to stay connected for **Total System** frequencies up to 52 Hz so as to provide the necessary regulation to control the **Total System** frequency to a satisfactory level. Similarly, the **Distribution Code** DPC7.4.1.3 has the same requirement for **Small Power Station**s. In order to prevent the unnecessary disconnection of a large volume of smaller **Generating Plant** for all **LV** and **HV** connected **Generating Plant** a 2-stage protection is to be applied as follows:

- Stage 1 should have a time delay of 90s and a setting of 51.5 Hz. The 90s setting should provide sufficient time for the **NETSO** to bring the **Total System** frequency below this level. Should the frequency rise be the result of a genuine islanding condition which the LoM protection fails to detect, this setting will help to limit the duration of the islanding period.

- Stage 2 should have a time delay of 0.5s and a setting of 52 Hz (ie to co-ordinate with the **Grid Code** and **Distribution Code** requirements with a practical time delay that can be tolerated by most **Generating Plant**). If the frequency rise to and above 52 Hz is the result of an undetected islanding condition, the **Generating Plant** will be disconnected with a delay of 0.5s plus circuit breaker operating time.

10.5.6 Under Frequency

The **Distribution Code** DPC7.4.1.3 requires **Small Power Station**s to maintain connection unless the **Total System** frequency falls below 47.5 Hz for 20s or below 47 Hz.

For all **LV** and **HV** connected **Generating Plant**, the following 2-stage under frequency protection should be applied:

- Stage 1 should have a setting of 47.5 Hz with a time delay of 20s;

- Stage 2 should have a setting of 47.0 Hz with a time delay of 0.5s;

- These settings are in line with the **Distribution Code** requirements.

10.5.7 Loss of Mains (LoM)

Loss of mains protection should be provided by a suitable means which can pass the relay stability tests laid out in 10.5.8. It should be noted that vector shift will no longer be allowed as a LoM protection technique and that RoCoF should be set as defined in table 10.5.7.1

~~In order to avoid unnecessary disconnection of **Generating Plant** during **Distribution System** faults or switching events and the consequent disruption to **Generator**s and customers, as well as take into account the aggregate effect caused by multiple LoM operations on **Total System** Stability, consideration should be given to use of the appropriately sensitive settings which can be adjusted to take into account **Generating Plant** type & rating and **Distribution System** fault level. Example setting formulae are indicated in the notes below the Table 10.5.7.1.~~

Formatted: Right

10.5.7.1 Settings for Long-Term Parallel Operation

Prot Function	Small Power Station				Medium Power Station	
	LV Protection[$]		HV Protection[$]			
	Setting	Time	Setting	Time	Setting	Time
U/V st 1	Vφ-n[†] - 13% = 200.1V	2.5s*	Vφ-φ[‡] -13%	2.5s*	Vφ-φ[‡]- 20%	2.5s*
U/V st 2	Vφ-n[†] - 20% = 184.0V	0.5s	Vφ-φ[‡] - 20%	0.5s		
O/V st 1	Vφ-n[†] + 14% =262.2V	1.0s	Vφ-φ[‡] + 10%	1.0s	Vφ-φ[‡] + 10%	1.0s
O/V st 2	Vφ-n[†]+ 19% = 273.7V	0.5s	Vφ-φ[‡] + 13%	0.5s		
U/F st 1	47.5Hz	20s	47.5Hz	20s	47.5Hz	20s
U/F st 2	47Hz	0.5s	47Hz	0.5s	47Hz	0.5s
O/F st 1	51.5Hz	90s	51.5Hz	90s	52Hz	0.5s
O/F st 2	52 Hz	0.5s	52Hz	0.5s		
~~LoM (Vector Shift)~~	~~K1 x 6 degrees~~		~~K1 x 6 degrees[#]~~		~~Intertripping expected~~	
~~LoM(RoCoF) <5MW[§]~~	~~K2 x 0.125 Hz/s~~		~~K2 x 0.125 Hz/s[#]~~		-	

Formatted Table

RoCoF[§] settings for Power Stations <5MW Registered Capacity		
Date of Commissioning	Asynchronous	Synchronous
Generating Plant Commissioned before 01/02/18	Not to be less than K2 x 0.125 Hz/s[#] and not to be greater than 1.0Hz/s[¶#], time delay 0.5s	Not to be less than K2 x 0.125 Hz/s[#] and not to be greater than 1.0Hz/s[¶# Ω], time delay 0.5s
Generating Plant commissioned on or after ~~xx/yy/(zz)~~01/02/18	1.0Hz/s[¶#], time delay 0.5s	1.0Hz/s[¶#], time delay 0.5s

Formatted: Space Before: 6 pt, After: 10 pt, Tab stops: 7.32 cm, Centered + 14.65 cm, Right

Formatted Table

RoCoF§ settings for Power Stations ≥5MW Registered Capacity				
Date of Commissioning		Small Power Stations		Medium Power Stations
		Asynchronous	Synchronous	
Generating Plant Commissioned before 01/08/14	Settings permitted until 01/08/16	Not to be less than K2 x 0.125 Hz/s# and not to be greater than ~~1H~~1.0Hz/s¶#, time delay 0.5s	Not to be less than K2 x 0.125 Hz/s# and not to be greater than 0.5Hz/s¶# Ω, time delay 0.5s	Intertripping Expected
	Settings permitted on or after 01/08/16	~~1H~~1.0Hz/s¶#, time delay 0.5s	0.5Hz/s¶# Ω, time delay 0.5s	Intertripping expected
Generating Plant commissioned between 01/08/14 and 31/07/16 inclusive		~~1H~~1.0Hz/s¶#, time delay 0.5s	0.5Hz/s¶# Ω, time delay 0.5s	Intertripping expected
Generating Plant commissioned on or after 01/08/16		~~1H~~1.0Hz/s¶#, time delay 0.5s	~~1H~~1.0Hz/s¶#, time delay 0.5s	Intertripping expected

Historic Vector Shift Settings			
Date of Commissioning	Small Power Stations		Medium Power Stations
	Asynchronous	Synchronous	
Settings permitted for **Generating Plant** commissioned before 01/02/18~~)~~	K1 x 6 degrees	K1 x 6 degrees#	Intertripping Expected
Settings permitted for **Generating Plant** commissioned on or after 01/02/18	Vector Shift not allowed as LoM in these Power Stations		Intertripping Expected

Formatted Table

(1) **HV** and **LV** Protection settings are to be applied according to the voltage at which the voltage related protection reference is measuring, eg:
- If the EREC G59 protection takes its voltage reference from an **LV** source then **LV** settings shall be applied. Except where a private none standard LV network exists, in this case the settings shall be calculated from **HV** settings values as indicated by section 10.5.16;
- If the EREC G59 protection takes its voltage reference from an **HV** source then **HV** settings shall be applied.

† A value of 230V shall be used in all cases for **Power Station**s connected to a **DNO LV Systems**

‡ A value to suit the nominal voltage of the **HV System** connection point.

* Might need to be reduced if auto-reclose times are <3s. (see 10.5.13).

Intertripping may be considered as an alternative to the use of a LoM relay

$ For voltages greater than 230V +19% which are present for periods of<0.5s the **Generating Unit** is permitted to reduce/cease exporting in order to protect the **Generating Unit**.

Formatted: Right

¶ The required protection requirement is expressed in Hertz per second (Hz/s). The time delay should begin when the measured ~~RoCof~~ RoCoF exceeds the threshold expressed in Hz/s. The time delay should be reset if measured RoCoF falls below that threshold. The relay must not trip unless the measured rate remains above the threshold expressed in Hz/s continuously for 500ms. Setting the number of cycles on the relay used to calculate the RoCoF is not an acceptable implementation of the time delay since the relay would trip in less than 500ms if the system RoCoF was significantly higher than the threshold.

Ω The minimum setting is 0.5Hz/s. For overall system security reasons, settings closer to 1.0Hz/s are desirable, subject to the capability of the Generating Plant to work to higher settings.

(2) LOM constants

K1 = 1.0 (for low impedance networks) or 1.66 – 2.0 (for high impedance networks)

K2 = 1.0 (for low impedance networks) or 1.6 (for high impedance networks)

A fault level of less than 10% of the system design maximum fault level should be classed as high impedance.

For **Type Tested Generating Unit**s K1=2.0 and K2=1.6. The LoM function shall be verified by confirming that the LoM tests specified in 13.8 have been completed successfully

~~(3)~~ Note that the times in the table are the time delays to be set on the appropriate relays. Total protection operating time from condition ~~initiation~~ detection to circuit breaker opening will be of the order of 100ms longer than the time delay settings in the above table with most circuit breakers, slower operation is acceptable in some cases.

(4) For the purposes of 10.5.7.1 the commissioning date means the date by which the tests detailed in 12.3 and 12.4 of EREC G59~~/3-2~~/3-3 have been completed to the DNO's satisfaction.

The **Manufacturer** must ensure that the **Interface Protection** in a **Type Tested Generating Unit** is capable of measuring voltage to an accuracy of ±1.5% of the nominal value and of measuring frequency to ± 0.2% of the nominal value across its operating range of voltage, frequency and temperature.

10.5.7.2 – Settings for Infrequent Short-Term Parallel Operation

Prot Function	Small Power Station			
	LV Protection		**HV** Protection	
	Setting	Time	Setting	Time
U/V	Vφ-n† -10% = 207V	0.5s	Vφ-φ‡ -6%	0.5s
O/V	Vφ-n† + 14% = 262.2V	0.5s	Vφ-φ‡ + 6%	0.5s
U/F	49.5Hz	0.5s	49.5Hz	0.5s
O/F	50.5Hz	0.5s	50.5Hz	0.5s

†A value of 230V shall be used in all cases for **Power Stations** connected to a **DNO LV System**s

‡A value to suit the voltage of the **HV System** connection point.

10.5.~~7~~8 Any **Generating Plant** commissioned after ~~01 March 2018~~01 Feb 2018 must not employ vector shift relays ~~-~~as a LoM technique. Any **Generating Plant** commissioned before ~~[01 March 2018~~01 Feb 2018~~]~~ must not be retrofited with vector shift as a LoM technique.

Formatted: Font: Bold

Formatted: Font: Bold

10.5.~~9~~8 Over and Under voltage protection must operate independently for all three phases in all cases.

10.5.10~~9~~ The settings in 10.5.7.1 should generally be applied to all **Generating Plant**. In exceptional circumstances **Generator**s have the option to agree alternative settings with the **DNO** if there are valid justifications in that the **Generating Plant** may become unstable or suffer damage with the settings specified in 10.5.7.1. The agreed settings should be recorded in the **Connection Agreement**.

10.5.11~~0~~ Once the settings of relays have been agreed between the **Generator** and the **DNO** they must not be altered without the written agreement of the **DNO**. Any revised settings should be recorded again in the amended **Connection Agreement**.

10.5.12~~1~~ The under/over voltage and frequency protection may be duplicated to protect the **Generating Plant** when operating in island mode although different settings may be required.

10.5.13~~2~~ For **LV** connected **Generating Plant**, the voltage settings will be based on the 230V nominal **System** voltage. In some cases **Generating Plant** may be connected to **LV System**s with non-standard operating voltages. Section 10.5.16~~7~~ details how suitable settings can be calculated based upon the **HV** connected settings in table 10.5.7.1. Note that **Generating Units** with non-standard **LV** protection settings cannot be **Type Tested** and these will need to be agreed by the **DNO** on a case by case basis.

Formatted: Right

10.5.1~~43~~ Co-ordination with existing protection equipment and auto-reclose scheme is also required, as stated in DPC7.4.3 of the **Distribution Code**. In particular the **Generator**'s protection should detect a LoM situation and disconnect the **Generating Plant** in a time shorter than any auto-reclose dead time. This should include an allowance for circuit breaker operation and generally a minimum of 0.5s should be allowed for this. For auto-reclosers set with a dead time of 3s, this implies a LoM response time of 2.5s. A similar response time is expected from under and over voltage relays. Where auto-reclosers have a dead time of less than 3s, there may be a need to reduce the operating time of under and over voltage relays. For **Type Tested Generating Unit**s no changes are required to the operating times irrespective of the auto-reclose times.

10.5.1~~54~~ If automatic resetting of the protective equipment is used, as part of an auto-restore scheme for the **Generating Plant**, there must be a time delay to ensure that healthy supply conditions exist for a continuous period of at least 20 s. The automatic reset must be inhibited for faults on the **Generator**'s installation. Staged timing may be required where more than one **Generating Plant** is connected to the same feeder. For **Type Tested Generating Unit**s the time delay is set at 20s.

10.5.1~~5~~6 Where an installation contains power factor correction equipment which has a variable susceptance controlled to meet the reactive power demands, the probability of sustained generation is increased. For **LV** installations, additional protective equipment provided by the **Generator**, is required as in the case of self-excited asynchronous machines.

10.5.1~~6~~7 Non-Standard private LV networks calculation of appropriate protection settings

The standard over and under voltage settings for **LV** connected **Generating Units** have been developed based on a nominal **LV** voltage of 230V. Typical **DNO** practice is to purchase transformers with a transformer winding ratio of 11000:433, with off load tap changers allowing the nominal winding ratio to be changed over a range of plus or minus 5% and with delta connected **HV** windings. Where a **DNO** provides a connection at **HV** and the **Customer** uses transformers of the same nominal winding ratio and with the same tap selection as the **DNO** then the standard **LV** settings in table 10.5.7.1 can be used for **Generating Units** connected to the **Customers LV** network. Where a **DNO** provides a connection at **HV** and the **Customers** transformers have different nominal winding ratios, and he chooses to take the protection reference measurements from the **LV** side of the transformer, then the **LV** settings stated in table 10.5.7.1 should not be used without the prior agreement of the **DNO**. Where the **DNO** does not consider the standard **LV** settings to be suitable, the following method shall be used to calculate the required **LV** settings based on the **HV** settings for **Small Power Station**s stated in table 10.5.7.1.

Identify the value of the transformers nominal winding ratio and if using other than the nominal tap, increase or decrease this value to establish a **LV System** nominal value based on the transformer winding ratio and tap position and the **DNO**s declared **HV system** nominal voltage.

.

For example a **Customer** is using a 11,000V to 230/400V transformer and it is proposed to operate it on tap 1 representing an increase in the high voltage winding of +5% and the nominal HV voltage is 11,000V.

$V_{LVsys} = V_{LVnom} \times V_{HVnom}/V_{HVtap}$

$V_{LVsys} = 230 \times 11000/11550 = 219V$

Where:

V_{LVsys} – LV system voltage

V_{LVnom} - LV system nominal voltage (230V)

V_{HVnom} - HV system nominal voltage (11,000V)

V_{HVtap} – HV tap position

The revised **LV** voltage settings required therefore would be;

OV stage 1	=	219x1.1	=	241V
OV stage 2	=	219x1.13	=	247.5V
UV stage 1	=	219x0.87	=	190.5V
UV stage 2	=	219x0.8	=	175V

The time delays required for each stage are as stated in table 10.5.7.1.

Where **Generating Units** are designed with balanced 3 phase outputs and no neutral is required then phase to phase voltages can be used instead of phase to neutral voltages.

This approach does not lend itself to **Type Tested Generating Unit**s and should only be used by prior arrangement with the host **DNO**. Where all other requirements of EREC G59 would allow the **Generation Unit** to be **Type Tested**, the **Manufacturer** may produce a declaration in a similar format to section 13.1 for presentation to the **DNO** by the **Installer**, stating that all **Generating Units** produced for a particular **Power Station** comply with the revised over and under voltage settings. All other required data should be provided as for **Type Tested Generating Unit**s. This declaration should make reference to a particular **Power Station** and its declared **LV System** voltage. These documents should not be registered on the ENA web site as they will not be of use to other **Installer**s who will have to consult with the **Manufacturer** and **DNO** to agree settings for each particular **Power Station**.

10.5.~~17~~18 The **Generator** shall provide a means of displaying the protection settings so that they can be inspected if required by the **DNO** to confirm that the correct settings have been applied. The **Manufacturer** needs to establish a secure way of displaying the settings in one of the following ways:

Formatted: Right

a. A display on a screen which can be read;

b. A display on an electronic device which can communicate with the **Generating Unit** and confirm that it is the correct device by means of a Identification number / name permanently fixed to the device and visible on the electronic device screen at the same time as the settings;

c. Display of all settings including nominal voltage and current outputs, alongside the identification number / name of the device, permanently fixed to the **Generating Unit**.

The provision of loose documents, documents attached by cable ties etc, a statement that the device conforms with a standard, or provision of data on adhesive paper based products which are not likely to survive due to fading, or failure of the adhesive, for at least 20 years is not acceptable.

10.6 Typical Protection Application Diagrams

This Section provides some typical protection application diagrams in relation to parallel operation of **Generating Plant** with **DNO Distribution System**. The diagrams only relate to **DNO** requirements in respect of the connection to the **Distribution System** and do not necessarily cover the safety of the **Generator**'s installation. The diagrams are intended to illustrate typical installations. The protection arrangements for individual schemes will be agreed between the **Generator** and the **DNO** in accordance with this document.

Figure 10.1 - List of Symbols used in Figures 10.2 to 10.6.

Figure 10.2 - Typical Protection Arrangement for an **HV Generating Unit** Connected to a **DNO HV System** Designed for Parallel Operation Only

Figure 10.3 - Typical Protection Arrangement for an **HV Generating Unit** Connected to a **DNO HV System** Designed for both Independent Operation (ie Standby Operation) and Parallel Operation

Figure 10.4 - Typical Protection Arrangement for an **LV Generating Unit** Connected to a **DNO HV System** and designed for both Independent Operation (ie Standby Operation) and Parallel Operation

Figure 10.5 - Typical Protection Diagram for an **LV Generating Unit** Connected to a **DNO LV System** Designed for Parallel Operation Only

Figure 10.6 - Typical Protection Diagram for an **LV Generating Unit** Connected to a **DNO LV System** Designed for both Independent Operation (ie Standby Operation) and Parallel Operation

Diagram Notes:

a. Neutral Voltage Displacement Protection

With arc suppression coil systems, the NVD relay should be arranged to provide an alarm only.

b. Reverse Power Protection

Reverse power protection may be either a standard three phase reverse power relay set to operate at above the agreed level of export into the **Distribution System**, or a more sensitive relay if no export is permitted.

c. Directional Protection

In some cases overcurrent protection may afford adequate back-up protection to the **Distribution System** during system faults. However, where increased sensitivity is required, three phase directional overcurrent IDMT relays, or alternative voltage based protection may be used.

d Load Limitation Relay

Three phase definite time overcurrent relays, in addition to providing overload protection, could be arranged to detect phase unbalance. This condition may be due to pulled joints or broken jumpers on the incoming **DNO** underground or overhead **HV** supply.

NB Items (c) and (d) are alternatives and may be provided as additional protection.

e. Phase Unbalance Protection

Three phase thermal relays for detecting phase unbalance on the incoming **DNO HV** supply, eg pulled joints, broken jumpers or uncleared unbalanced faults.

f. Supply Healthy Protection

Some form of monitoring or protection is required to ensure that the **DNO**s supply is healthy before synchronizing is attempted. This could be simply under and over voltage monitoring of all phases on the **DNO** side of the synchronising circuit breaker. Alternatively automatic under and over voltage monitoring, applied across all three phases, together with synchronising equipment designed such that closing of the synchronising circuit breaker cannot occur unless all three phases of the supply have frequency and voltages within statutory limits and have a voltage phase balance within the limits in EREC P29.

Formatted: Right

Figure 10.1 - List of Symbols in Figures 10.2 – 10.6

BEF	Balanced Earth Fault
CC	Circulating Current
3DOCI	3 Pole Directional Overcurrent (IDMT)
EI	Earth Fault (IDMT)
LOM	Loss of Mains
M	Metering
NVD	Neutral Voltage Displacement
3OCI	3 Pole Overcurrent (IDMT)
OF UF	Single Stage Over Frequency & Single Stage Under Frequency
OV UV	Single Stage Over Voltage & Single Stage Under Voltage
Ph Unbal	Phase Unbalance
RP	Reverse Power
2ST OF UF	2 Stage Over Frequency & 2 Stage Under Frequency
2ST OV UV	2 Stage Over Voltage & 2 Stage Under Voltage
SYNC	Synchronising
	Circuit Beaker

Figure 10.2 - Typical Protection Arrangement for an **HV Generating Unit** Connected to a **DNO HV System** Designed for Parallel Operation Only

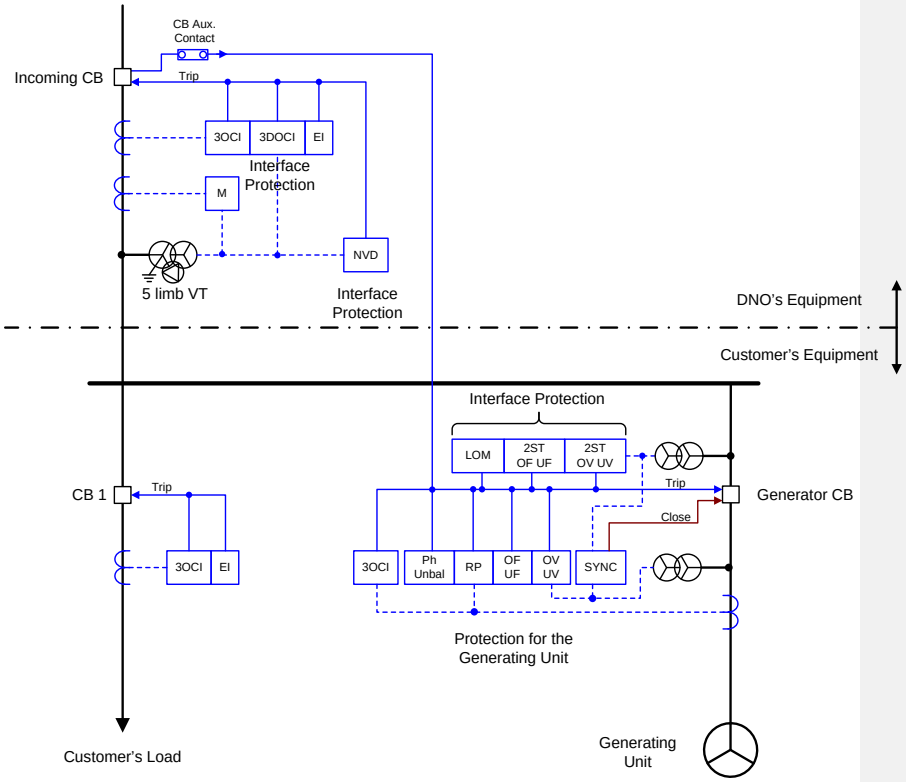

Formatted: Right

Figure 10.3 - Typical Protection Arrangement for an **HV Generating Unit** Connected to a **DNO HV System** Designed for both Independent Operation (ie Standby Operation) and Parallel Operation

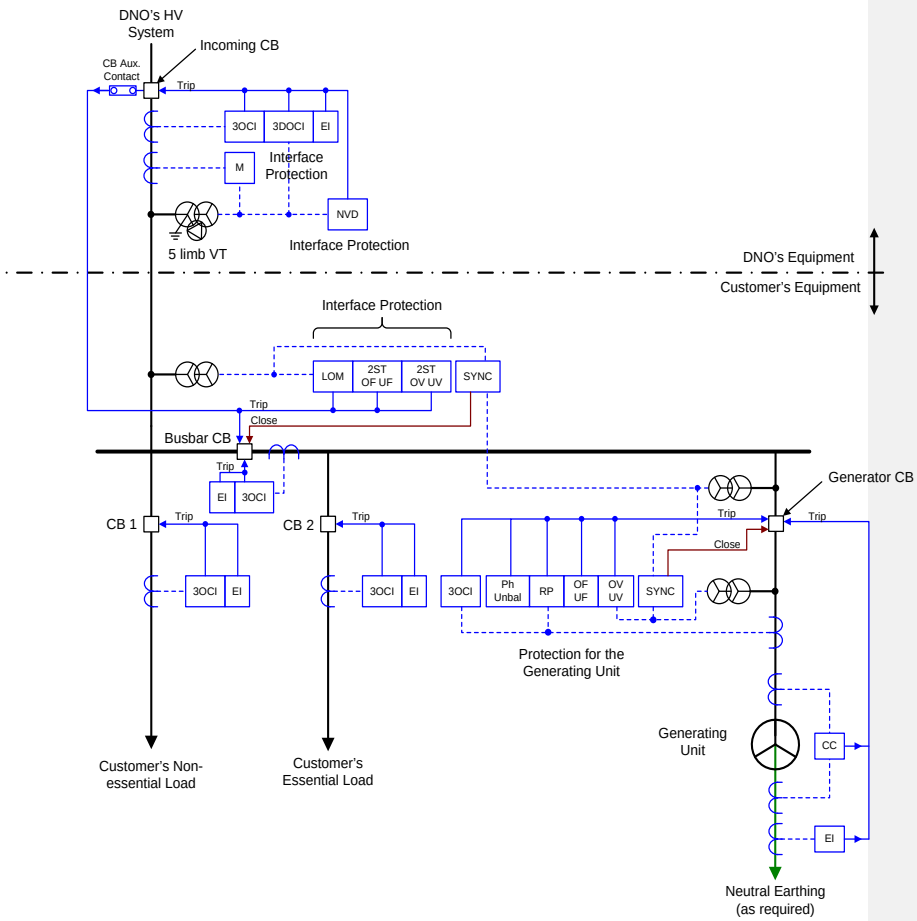

Figure 10.4 - Typical Protection Arrangement for an **LV Generating Unit** Connected to a **DNO HV System** and designed for both Independent Operation (ie Standby Operation) and Parallel Operation..

.

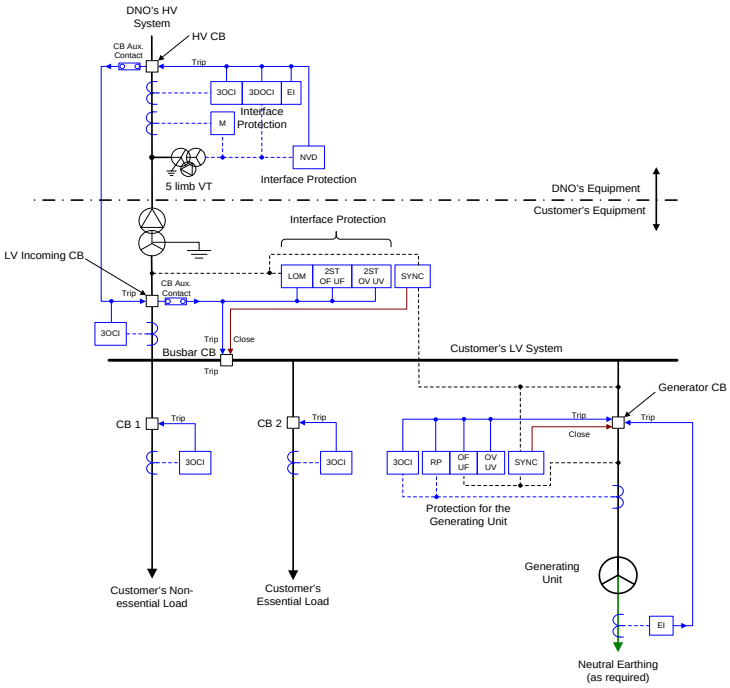

Formatted: Right

Figure 10.5 - Typical Protection Diagram for an **LV Generating Unit** Connected to a **DNO LV System** Designed for Parallel Operation Only

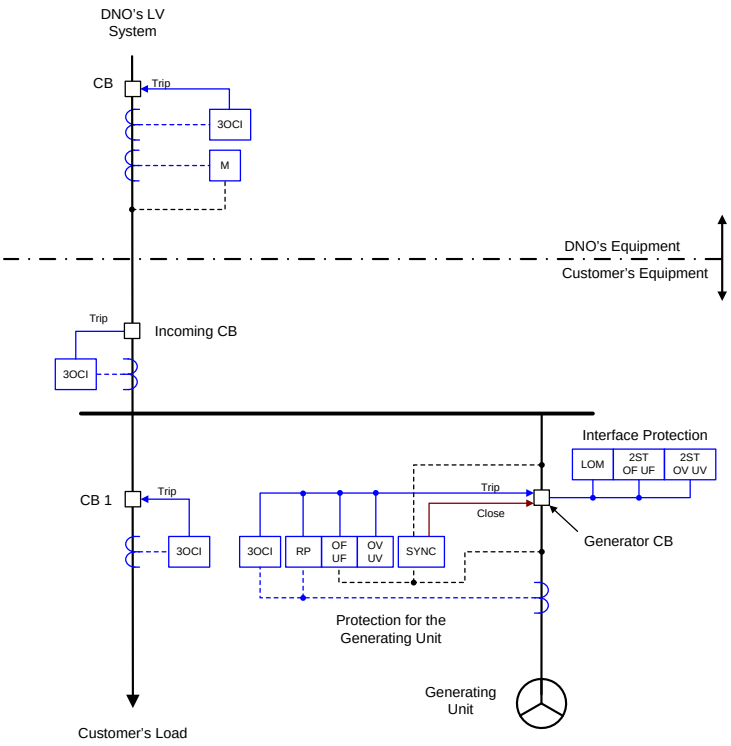

Figure 10.6 - Figure 10.6 - Typical Protection Diagram for an **LV Generating Unit** Connected to a **DNO LV System** Designed for both Independent Operation (ie Standby Operation) and Parallel Operation

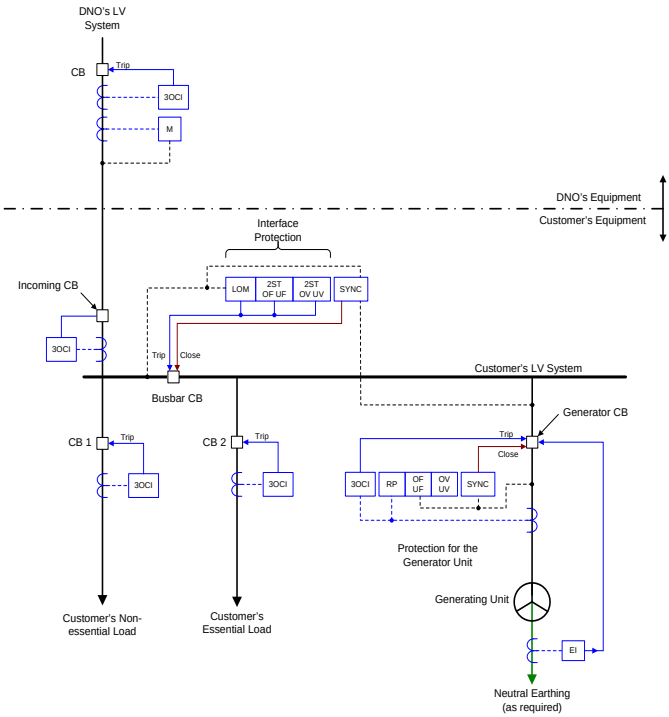

Formatted: Right

11 INSTALLATION, OPERATION AND CONTROL INTERFACE

11.1 General

11.1.1 Installations should be carried out by competent persons, who have sufficient skills and training to apply safe methods of work to install the **Generating Plant** in compliance with this EREC. Ideally they should have recognised and approved qualifications relating to the fuel / energy sources and general electrical installations[8].

11.1.2 Notwithstanding the requirements of this EREC, the installation should be carried out to the standards required in the **Manufacturer**'s installation instructions.

11.1.3 The **Generator** and **DNO** must give due regard to these requirements and ensure that all personnel are competent in that they have adequate knowledge and sufficient judgement to take the correct action when dealing with an emergency. Failure to take correct action may jeopardise the **Generator**'s equipment or the **Distribution System** and give rise to danger.

11.1.4 No parameter relating to the electrical connection or setting that is subject to **Type Tested** certification shall be modified as part of or after the installation process unless previously agreed in writing between the **DNO** and the **Generator.** User access to change such parameters shall be prevented by the use of sealing plugs / paper seals / passwords etc.

11.1.5 The **DNO** and the **Generator** must agree in writing the salient technical requirements of the interface between their two systems. These requirements will generally be contained in the Site Responsibility Schedule and/or the **Connection Agreement.** In particular it is expected that the agreement will include:

a. the means of synchronisation between the **Generator**'s system and the **Distribution System**, where appropriate;

b. the responsibility for plant, equipment and protection systems maintenance, and recording failures;

c. the means of connection and disconnection between the **DNO**s and **Generator**'s systems;

d. key technical data eg import and export capacities, operating power factor range, interface protection settings;

e. the competency of all persons carrying out operations on their systems;

---

[8] The Installers can choose to be approved under the 'Microgeneration Certification Scheme (MCS) supported by Department of Energy and Climate Change. This certification scheme for microgeneration products and Installers provides an ongoing, independent, third party assessment of Installers of microgeneration systems and technologies to ensure that the requirements of the appropriate standards are met and maintained. The scope of MCS scheme includes the supply, design, installation, set to work and commissioning of a range of microgeneration technologies. For more details, see http://www.greenbooklive.com/page.jsp?id=4

f. details of arrangements that will ensure an adequate and reliable means of communication between the **DNO** and **Generator**;

g. the obligation to inform each other of any condition, occurrence or incident which could affect the safety of the other's personnel, or the maintenance of equipment and to keep records of the communication of such information;

h. the names of designated persons with authority to act and communicate on their behalf and their appropriate contact details.

The use of **Type Tested Generating Unit**s for **Power Stations** of up to 50kW (3 phase) or 17kW (1 phase) is deemed to cover this requirement.

11.1.6 The **Generator**s should be aware that many **DNO**s apply auto-reclose systems to **High Voltage** overhead line circuits. This may affect the operations of directly connected **HV Generating Plant**s and also **Generating Plant**s connected to **LV Distribution System**s supplied indirectly by **HV** overhead lines.

11.2 Isolation and Safety Labelling

11.2.1 Every installation or system which includes **Generating Plant** operating in parallel with the **Distribution System** must include a means of isolation capable of disconnecting the whole of the **Generating Plant**[9] infeed to the **Distribution System.** This equipment will normally be owned by the **Generator**, but may by agreement be owned by the **DNO**.

11.2.2 The **Generator** must grant the **DNO** rights of access to the means of isolation In accordance with DPC7.2 of the **Distribution Code**.

11.2.3 To ensure that **DNO** staff and that of the User and their contractors are aware of the presence of **Generating Plant**, appropriate warning labels should be used.

11.2.4 Where the installation is connected to the **DNO LV Distribution System** the **Generator** should generally provide labelling at the **Point of Supply** (Fused Cut-Out), meter position, consumer unit and at all points of isolation within the customer's premises to indicate the presence of **Generating Plant.** The labelling should be sufficiently robust and if necessary fixed in place to ensure that it remains legible and secure for the lifetime of the installation. The Health and Safety (Safety Signs & Signals) Regulations 1996 stipulates that labels should display the prescribed triangular shape, and size, using black on yellow colouring. A typical label, for both size and content, is shown below in figure 11.1.

[9] Where the generating plant is designed to support part of the customer's system independently from the DNO system, the switch that is used to separate the independent part of the customer's system from the DNO system must disconnect each phase and neutral. This prevents generator neutral current from inadvertently flowing through the part of the system that is not supported by the generating plant. See also Figure 8.7 and 8.9

Formatted: Right

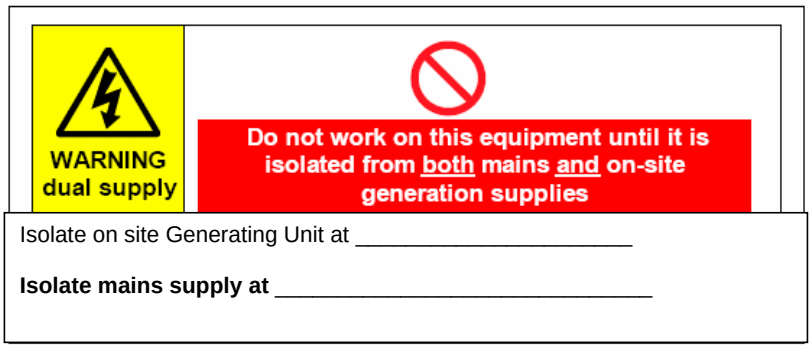

Figure 11.1 Warning label

11.2.5 Where the installation is connected to the **DNO HV Distribution System** the **Generator** should give consideration to the labelling requirements. In some installations eg a complex CHP installation, extensive labelling may be required, but in others eg a wind farm connection, it is likely to be clear that **Generating Unit**s are installed on site and labelling may not be required. Any labels should comply with The Health and Safety (Safety Signs & Signals) Regulations 1996 which stipulates that labels should display the prescribed triangular shape, and size, using black on yellow colouring.

11.3 Site Responsibility Schedule

11.3.1 In order to comply with the Distribution Planning and Connection Code DPC5.4.3 of the **Distribution Code** a Site Responsibility Schedule (SRS) should be prepared by the **DNO** in conjunction with the **Generator.** The SRS should clearly indicate the ownership, operational and maintenance responsibility of each item of equipment at the interface between the **Distribution System** and the **Generating Plant**, and should include an operational diagram so that all persons working at the interface have sufficient information so that they can undertake their duties safely and to minimise the risk of inadvertently interrupting supplies. The SRS should also record the agreed method of communication between the **DNO** and the **Generator**. Where the **Power Station** has a total capacity of 50kW or 17kW per phase or less and is connected at **LV** then only compliance with section 11.3.3 is required.

11.3.2 The operational diagram should be readily available to those persons requiring access to the information contained on it. For example, this could be achieved by displaying a paper copy at the **Point of Supply**, or alternatively provided as part of a computer based information system to which all site staff has access. The most appropriate form for this information to be made available should be agreed as part of the connection application process.

11.3.3 In the case of a **LV** connected **Generating Plant,** a simple diagram located at the **Point of Supply** may be sufficient. The scope of the diagram should cover the **Distribution System**, **Customer**'s **installation** and the **Generating Plant** as shown below in Fig 11.2, however the location of any metering devices, consumer unit and circuit protective devices (together with their settings) within the **Customer**'s **installation** should also be shown.

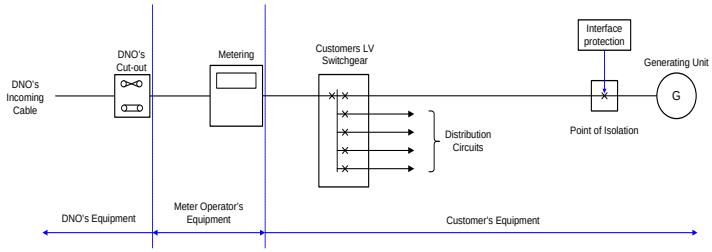

Fig 11.2 – Example of a Operational Diagram

11.3.4 In the case of an **HV** connected **Generating Plant** the diagram is likely to be more complex and contain more detailed information.

11.3.5 In addition to preparing the diagram as part of the connection process, there are obligations on the **DNO** and the **Generator** to ensure that the Site Responsibility Schedule including the operational diagram are updated to reflect any changes on site. To facilitate this, the **Generator** must contact the **DNO** when any relevant changes are being considered.

11.4 Operational and Safety Aspects

11.4.1 Where the **Point of Supply** provided by the **DNO** for parallel operation is at **HV**, the **Generator** must ensure:

a. that a person with authority, or his staff, is available at all times to receive communications from the **DNO** Control Engineer so that emergencies, requiring urgent action by the **Generator**, can be dealt with adequately. Where required by the **DNO**, it will also be a duty of the **Generator**'**s** staff to advise the **DNO** Control Engineer of any abnormalities that occur on the **Generating Plant** which have caused, or might cause, disturbance to the **Distribution System**, for example earth faults;

b. Where in the case that it is necessary for the **Generator's** staff to operate the **DNO**s equipment, they must first have been appropriately trained and designated as a **DNO** 'Authorised Person' for this purpose. The names of the **Generators** authorised persons should be included on the Site Responsibility Schedule. All operation of **DNO** equipment must be carried out to the specific instructions of the **DNO** Control Engineer in accordance with the **DNO**s safety rules.

11.4.2 For certain **Generating Plant** connections to an **HV Point of Supply**, the **Generator** and the **DNO** may have mutually agreed to schedule the real and / or reactive power outputs to the **Distribution System** to ensure stability of the local **Distribution System**. The **DNO** may require agreement on specific written procedures to control the bringing on and taking off of such **Generating Plant**. The action within these procedures will normally be controlled by the **DNO**s Control Engineer.

Formatted: Right

11.4.3 Where the **Point of Supply** provided by the **DNO** for parallel operation is at **LV**, the **DNO**, depending upon local circumstances, may require a similar communications procedure as outlined in sub-paragraph 11.4.1(a) above.

11.5 Synchronizing and Operational Control

11.5.1 Before connecting two energised electrical systems, for example a **Distribution System** and **Generating Plant**, it is necessary to synchronise them by minimising their voltage, frequency and phase differences.

11.5.2 Operational switching, for example synchronising, needs to take account of **Step Voltage Changes** as detailed in Section 9.5.

11.5.3 Automatic synchronising equipment will be the norm which, by control of the **Generating Unit**'s field system (Automatic Voltage Regulator) and governor, brings the incoming unit within the acceptable operating conditions of voltage and speed (frequency), and closes the synchronising circuit breaker.

11.5.4 The facility to use the **DNO**s circuit breaker manually for synchronizing can only be used with the specific agreement of the **DNO**.

11.5.6 The synchronising voltage supply may, with **DNO** agreement, be provided from a **DNO** owned voltage transformer. Where so provided, the voltage supplies should be separately fused at the voltage transformer.

11.5.7 Where the **Generator**'s system comprises ring connections with normal open points, it may not be economic to provide synchronising at all such locations. In such cases mechanical key interlocking may be applied to prevent closure unless one side of the ring is electrically dead. A circuit breaker or breakers will still, however, require synchronising facilities to achieve paralleling between the **Generator** and the **DNO** supply.

11.5.8 The conditions to be met in order to allow automatic reconnection when the **DNO** supply is restored are defined in Section 10. Where a **Generator** requires his **Generating Plant** to continue to supply a temporarily disconnected section of the **Distribution System** in island mode**,** the special arrangements necessary will need to be discussed with the **DNO**.

12 TESTING AND COMMISSIONING

12.1 General

12.1.1 A brief summary of generic requirements related to connection application, notification of commissioning and commissioning test requirements for **Power Stations** and **Generating Unit**s are given in Section 6.1. This section provides further details on the testing, commissioning and witnessing requirements.

12.1.2 General procedural issues, including the requirements for witnessing the commissioning tests and checks are described in Section 12.2.

12.1.3 The requirements for the tests and checks themselves are divided into two parts. Section 12.3 specifies the commissioning tests and checks that shall be carried out at all **Power Stations** irrespective of whether the **Generating Unit**s have been **Type Tested** to EREC G59 or EREC G83 or not. Section 12.4 specifies additional requirements for **Generating Unit**s have not been **Type Tested** to EREC G59 or EREC G83.

12.1.4 It is the responsibility of the **Installer** to undertake these commissioning tests / checks and to ensure the **Power Station** and **Generating Unit**s meet all the relevant requirements.

12.1.5 In addition to the commissioning tests and checks required under EREC G59, further tests may be required by the **Manufacturer**, supplier or **Installer** of the **Generating Unit**s or may be required to satisfy legislation and other standards.

12.2 Procedures and Witnessing Requirements

12.2.1 The DNO may decide to witness the **Power Station** and **Generating Unit** commissioning tests and checks. The table in Section 6.1 provides information on when the DNO may wish to witness the testing and whether the DNO may charge for doing so.

12.2.2 Where the **Power Station** capacity is no higher than 50kW 3 phase (17kW 1 phase), the **Generating Unit**s have been type tested to EREC G59 or EREC G83 and they are connected to the **DNO**'s network at **Low Voltage**, the **DNO** will not normally witness the commissioning checks and tests. In such cases, where the **DNO** does decide to witness they will advise this as part of the connection offer. Reasons for witnessing such installations may include:

a. A new **Installer** with no track record in the **DNO** area.
b. A check on the quality of an installation either on a random basis or as a result of problems that have come to light at previous installations.

12.2.3 Where the **Power Station** includes **Generating Unit**s that have not been **Type Tested** or the **Power Station** capacity is greater than 50kW 3 phase (17kW 1 phase) or the **Power Station** is connected at **High Voltage** the **DNO** will normally decide to witness the commissioning checks and tests. In such cases the Installer shall make arrangements for the **DNO** to witness the commissioning tests unless otherwise agreed with the **DNO**.

12.2.4 Where commissioning tests and checks are to be witnessed the **Installer** shall discuss and agree the scope of these tests with the **DNO** at an early stage of the project. The **Installer** shall submit the scope, date and time of the commissioning tests at least 15 days before the proposed commissioning date.

Formatted: Right

12.3 Commissioning Tests / Checks required at all Power Stations

12.3.1 The following tests and checks shall be carried out by the Installer at all **Power Stations** and on all **Generating Unit**s irrespective of whether they have been **Type Tested** or not:

a. Inspect the **Power Station** to check compliance with BS7671. Checks should consider:

(i) Protection

(ii) Earthing and bonding

(iii) Selection and installation of equipment

b. Check that suitable lockable points of isolation have been provided between the **Generating Unit**s and the rest of the installation.

c. Check that safety labels have been installed in accordance with clause 11.2 of EREC G59;

d. Check interlocking operates as required. Interlocking should prevent **Generating Unit**s being connected to the **DNO** system without being synchronised;

e. Check that the correct protection settings have been applied (in accordance with EREC G59 clause 10.5.7.1);

f. Complete functional tests to ensure each **Generating Unit** synchronises with, and disconnects from, the **DNO**s **System** successfully and that it operates without tripping under normal conditions;

g. After all other tests have been completed successfully (including where required additional tests for non type tested equipment) carry out a functional test to confirm that the **Interface Protection** operates and trips each **Generating Unit** when supplies are disconnected between the **Generating Unit** and the **DNO**s **System**.

1. This test may be carried out by opening a suitably rated switch (not the one expected to open for a protection operation) between the **Generating Unit** and the **DNO**s **Point of Supply** and checking that the **Generating Unit** disconnects quickly (eg within 1s);

2. Alternatively, the test may be carried out by removing one or all of the voltage sensing supplies to the protection relay and checking that the **Generating Unit** disconnects quickly (eg within 1s);

h. Check that once the phases are restored following the functional test described in (g) at least 20s elapses before the **Generating Unit**s re-connect.

12.3.2 The tests and checks shall be carried out once the installation is complete, or, in the case of a phased installation (i.e. where **Generating Units** are installed in different phases), when that part of the installation has been completed. The results of these tests shall be recorded on the commissioning form included in Appendix 13.2. The **Installer** or **Generator**, as appropriate, shall complete the

declaration at the bottom of the form, sign and date it and provide a copy to the **DNO** at the time of commissioning (where tests are witnessed) or within 28 days of the commissioning date (where the tests are not witnessed).

12.4 Additional Commissioning requirements for Non Type Tested Generating Units

12.4.1 Additional commissioning tests are required for **Generating Units** that have not been **Type Tested** to EREC G59 or EREC G83 or a later version. The following describes how these should be carried out for the standard range of protection required. Where additional protection is fitted then this should also be tested, additional test requirements are to be agreed between the **DNO** and **Generator**.

The results of these tests shall be recorded in the schedule provided in Appendix 13.2 and 13.3 using the relevant sections for **HV** and **LV** protection along with any additional test results required.

a) Calibration and stability tests shall be carried out on the over voltage and under voltage protection <u>for each phase</u>, as described below:

(i) The operating voltage shall be checked by applying nominal voltage to the protection (so that it resets) and then slowly increasing this voltage (for over voltage protection) or reducing it (for under voltage protection) until the protection picks up. The voltage at which the protection picks up shall be recorded. Where the test equipment increases / decreases the voltage in distinct steps, these shall be no greater than 0.5% of the voltage setting. Each pickup value shall be within 1.5% of the required setting value.

(ii) Timing tests shall be carried out by stepping the voltage from the nominal voltage to a value 4V above the setting voltage (for overvoltage protection) and 4V below the setting (for under voltage protection) and recording the operating time of the protection. The operating time of the protection shall be no shorter than the setting and no greater than the setting + 100ms.

(iii) Stability tests (no-trip tests) shall also be carried out at the voltages and for the durations defined in Appendix 13.3. The protection must not trip during these tests.

b) Calibration and stability tests shall be carried out on the over frequency and under frequency protection as described below:

(i) The operating frequency shall be checked by applying nominal frequency to the protection (so that it resets) and then slowly increasing this frequency (for over frequency protection) or reducing it (for under frequency protection) until the protection picks up. The frequency at which the protection picks up shall be recorded. Where the test equipment increases / decreases the frequency in distinct steps, these shall be no greater than 0.1% of the frequency setting. Each pick up value shall be within 0.2% (ie 0.1Hz) of the setting value.

Formatted: Right

(ii) Timing tests shall be carried out by stepping the frequency from 50Hz to a value 0.2Hz above the setting frequency (for over frequency protection) and 0.2Hz below the setting (for under frequency protection) and recording the operating time of the protection. The operating time of the protection shall be no shorter than the setting and no greater than the setting + 100ms or the setting + 1% of the setting, whichever gives the longer time.

(iii) Stability tests (no-trip tests) shall also be carried out at the frequencies and for the durations defined in the commissioning test record, Appendix 13.3. The protection must not trip during these tests.

c) Calibration tests for rate of change of frequency protection, where used, shall be carried out as follows:

(i) Rate of change of frequency shall be checked by first applying a voltage with a frequency of 5~~0.5~~1.0Hz to the protection and then ramping this frequency down at 0.1Hzs^{-1} less than the RoCoF protection setting until a frequency reaches 49.0~~9.5~~Hz. This test is repeated at increasing values of rate of change of frequency (in increments of 0.025Hzs^{-1} or less) until the protection operates. The test shall be repeated for rising frequency but this time each tests shall be start at 49.~~5Hz~~ 0Hz and end at 5~~0.5~~1.0Hz. The operating values should be within 0.025Hzs^{-1} ~~per second~~ of the required setting.

(ii) Timing tests shall be carried out by applying a falling and a rising frequency at rate of 0.05Hzs^{-1} above the setting value. The protection operating times shall be no longer than 0.5s (for historic RoCoF with no time delay) or where 0.5s time delay is required, 1.0s.

d) Calibration for vector shift protection, where used, shall be carried out as follows:

(i) The tests shall be carried out at nominal voltage. An instantaneous shift in the voltage vector shall be applied using an appropriate test set. A vector shift below the setting value shall applied initially (eg starting at 4 degrees). The test shall be repeated with increasing vector shift values (in increments of 1 degree or less) until the pickup value is determined. The tests shall be carried out for both leading and lagging shifts in the voltage vector.

(ii) Timing tests shall be carried out by applying a vector shift of 3 degrees above the setting and recording the operating time of the protection. Test shall be carried out for both a leading and a lagging shift in voltage.

~~(ii)~~ Any **Generating Plant** commissioned after ~~[01 March 2018~~01 Feb 2018~~]~~ must not employ vector shif relayst as a LoM technique. Any

Formatted: Font: (Default) Arial

Formatted: Left, Indent: Left: 1.27 cm, Line spacing: Multiple 1.15 li, No bullets or numbering

Generating Plant commissioned before ~~[01 March 2018~~01 Feb 2018~~]~~ must not be retrofited with vector shift as a LoM technique.

e) RoCoF and vector shift stability checks shall be performed on all ~~loss of mains~~ interface protection relays in accordance with Appendix 13.3 irespective of the type of loss of mains protection employed for a particular **Generating Unit** or **Power Station**.

12.4.2 It may be necessary for undertake ad-hoc testing to determine[10], for example:

a. the voltage dip on synchronising;

b. the harmonic voltage distortion;

c. the voltage levels as a result of the connection of the **Power Station**s and to confirm that they remain within the statutory limits.

12.5 Periodic Testing

12.5.1 The **Interface Protection** shall be tested by the **Generator** at intervals to be agreed with the **DNO.**

12.6 Changes at the Installation

12.6.1 If during the lifetime of the **Generating Plant** it is necessary to replace a major component of a **Generating Unit** or its protection system, it is only necessary to notify the **DNO** if the operating characteristics of the **Generating Plant** or the protection have been altered when compared against that which was originally commissioned.

12.6.2 In the event that **Generating Plant** is to be decommissioned and will no longer operate as a source of electrical energy in parallel with the **Distribution System**, the **Generator** shall notify the **DNO** by providing the information as detailed in Appendix 13.4. Where the presence of **Generating Plant** is indicated in a bespoke **Connection Agreement**, it will be necessary to amend the **Connection Agreement** appropriately.

12.6.3 Where one or more **Generating Unit**s are to be added or replaced at an existing **Power Station** installed under an earlier version of EREC G59, EREC G83 or the **Distribution Code**, it is not necessary to modify the other existing **Generating Units** to comply with the latest versions of the these documents unless these documents explicitly include retrospective changes. For the avoidance of doubt, this also applies where the changes increase the capacity of the Power Substation above the 16A per phase threshold. For example, if a new 3kW one phase **Generating Unit** is added to an existing **Power Station** comprising an existing 3kW 1 phase **Generating Unit** complying with EREC G83/1-1, this increases the capacity of the **Power Station** from 3kW (13.04A per phase) to 6kW (26.08A per phase). In this case the new **Generating Unit**

[10] Such periodic testing may be required due to system changes, **DNO** protection changes, fault investigations etc.

will either have to comply with EREC G59/3 or EREC G83~~/2~~ (as amended) but the existing **Generating Unit** will not need to be modified.

Formatted: Right

12.6.4 If a **Generating Unit** is changed at a **Power Station** the replacement must comply with the current version of EREC G59 or EREC G83, as applicable.

13 APPENDICES

Appendix	Application	Form Title
13.1	Type Testing a **Generating Unit** (>16A per phase but ≤ 50kW 3 phase or 17kW 1 phase.	**Generating Unit** Type Test Sheet **Type Tested Generating Unit**(>16A per phase but ≤ 50 kW 3 phase or 17 kW 1 phase)
13.2	Comissioning a **Power Station** comprising only **Type Tested Generating Units**	**Generating Plant** Installation & Commissioning Confirmation
13.3	Commissioning a **Power Station** comprising one or more non-**Type Tested Generating Units** (Appendix applicable in addition to Appendix 13.2)	**Generating Plant** Installation & Commissioning Tests (Additional commissioning test requirements for non-type tested **Generating Units**)
13.4	Decommissioning of any **Generating Unit**	**Generating Plant** Decommissioning Confirmation
13.5	Connection application for a **Type Tested Generating Unit** in a new or existing installation where the aggregate installed capacity of the **Power Station** will be 50kW or 17kW per phase or less comprising only of **Type Tested Generating Units.** Note for all other **Power Stations** the **DNOs** common application form shall be used.	Application for connection of **Type Tested Generating Unit(**s) with Total Aggregate **Power Station** Capacity < 50kW 3-Phase, or <17kW Single Phase

13.6	Additional Information Relating to System Stability Studies	
13.7	Loss of Mains Protection Analysis	
13.8	Type Testing of **Generation Units** of 50kW three phase, or 17kW per phase or less. Guidance for **Manufacturers**	
13.9	Main Statutory and other Obligations	
13.10	Guidance on acceptable unbalance between phases in a **Power Station**	
~~13.11~~	~~Guidance on Risk Assessment when using RoCoF LoM Protection for **Power Stations** in the 5MW to 50MW range~~	

Section 13.1

Formatted: Right

13.1 Generating Unit Type Test Sheet

Type Tested Generating Unit(>16A per phase but ≤ 50 kW 3 phase or 17 kW 1 phase)

TYPE TEST SHEET

This Type Test sheet shall be used to record the results of the type testing of Generating Unit between 16A per phase and 17kW per phase maximum output at 230V (17kW limit single phase, 34kW limit split phase, 50kW limit 3 phase) It includes the **Generating Unit**s supplier declaration of compliance with the requirements of Engineering Recommendation G59/3			
Type Tested reference number			
Generating Unit technology			
System supplier name			
Address			
Tel		Fax	
E:mail		Web site	
Maximum export capacity, use separate sheet if more than one connection option.		kW single phase, single, split or three phase system	
		kW three phase	
		kW two phases in three phase system	
		kW two phases split phase system	
System supplier declaration. - I certify on behalf of the company named above as a supplier of a **Generating Unit**, that all products supplied by the company with the above Type Test reference number will be manufactured and tested to ensure that they perform as stated in this document, prior to shipment to site and that no site modifications are required to ensure that the product meets all the requirements of EREC G59/3.			
Signed		On behalf of	

Formatted: Space Before: 5 pt, After: 5 pt

Formatted: Space After: 2 pt

Section 13.1

Note that testing can be done by the manufacturer of an individual component, by an external test house, or by the supplier of the complete system, or any combination of them as appropriate.

Where parts of the testing are carried out by persons or organisations other than the supplier then the supplier shall keep copies of all test records and results supplied to them to verify that the testing has been carried out by people with sufficient technical competency to carry out the tests.

Formatted: Space Before: 5 pt, After: 5 pt

Power Quality. Harmonics. These tests should be carried out as specified in 61000-3-12 or 61000-3-2. Only one set of tests is required and the **Manufacturer** should decide which one to use and complete the relevant table. The chosen test should be undertaken with a fixed source of energy at two power levels a) between 45 and 55% and b) at 100% of maximum export capacity.

The test should be carried out on a single **Generating Unit.** The results need to comply with the limits of table 2 of BS EN 61000-3-12 for single phase equipment, to table 3 of BS EN 61000-3-12 for three phase equipment or to table 1 of BS EN 61000-3-2 if that standard is used.

Note that Generating Units meeting the requirements of BS EN 61000-3-2 will need no further assesment with regards to harmonics. Generating Units with emissions close to the limits laid down in BS EN 61000-3-12 may require the installation of a transformer between 2 and 4 times the rating of the **Generating Unit** in order to accept the connection to a **DNO**'s network.

Formatted: Space Before: 5 pt, After: 5 pt

Generating Unit tested to BS EN 61000-3-12						
Generating Unit rating per phase (rpp)				kVA	Harmonic % =Measured Value (Amps) x 23/rating per phase (kVA)	
Harmonic	At 45-55% of rated output		100% of rated output		Limit in BS EN 61000-3-12	
	Measured Value MV in Amps	%	Measured Value MV in Amps	%	1 phase	3 phase
2					8%	8%
3					21.6%	Not stated
4					4%	4%
5					10.7%	10.7%
6					2.67%	2.67%

Formatted: Space Before: 5 pt, After: 5 pt

Formatted: Space Before: 5 pt, After: 5 pt

Formatted: Space Before: 5 pt, After: 5 pt

Formatted: Space Before: 5 pt, After: 5 pt

Formatted: Space Before: 5 pt, After: 5 pt

Formatted: Space Before: 5 pt, After: 5 pt

Formatted: Space Before: 5 pt, After: 5 pt

Formatted: Space Before: 5 pt, After: 5 pt

Formatted: Space Before: 5 pt, After: 5 pt

Section 13.1

7					7.2%	7.2%
8					2%	2%
9					3.8%	Not stated
10					1.6%	1.6%
11					3.1%	3.1%
12					1.33%	1.33%
13					2%	2%
THD					23%	13%
PWHD					23%	22%

Generating Unit tested to BS EN 61000-3-2						
Generator Unit rating per phase (rpp)				kW		
Harmonic	At 45-55% of rated output		100% of rated output			
	Measured Value MV in Amps		Measured Value MV in Amps		Limit in BS EN 61000-3-2 in Amps	Higher limit for odd harmonics 21 and above
2					1.080	
3					2.300	
4					0.430	
5					1.140	

Formatted: Right
Formatted: Space Before: 5 pt, After: 5 pt
Formatted: Space Before: 5 pt, After: 5 pt
Formatted: Space Before: 5 pt, After: 5 pt
Formatted: Space Before: 5 pt, After: 5 pt
Formatted: Space Before: 5 pt, After: 5 pt
Formatted: Space Before: 5 pt, After: 5 pt
Formatted: Space Before: 5 pt, After: 5 pt
Formatted: Space Before: 5 pt, After: 5 pt
Formatted: Space Before: 5 pt, After: 5 pt
Formatted: Space Before: 5 pt, After: 5 pt
Formatted: Space Before: 5 pt, After: 5 pt
Formatted: Space Before: 5 pt, After: 5 pt
Formatted: Space Before: 5 pt, After: 5 pt
Formatted: Space Before: 5 pt, After: 5 pt
Formatted: Space Before: 5 pt, After: 5 pt
Formatted: Space Before: 5 pt, After: 5 pt
Formatted: Space Before: 5 pt, After: 5 pt

Formatted: Space After: 2 pt

6					0.300	
7					0.770	
8					0.230	
9					0.400	
10					0.184	
11					0.330	
12					0.153	
13					0.210	
14					0.131	
15					0.150	
16					0.115	
17					0.132	
18					0.102	
19					0.118	
20					0.092	

Formatted: Space Before: 5 pt, After: 5 pt

Formatted: Space Before: 5 pt, After: 5 pt

Formatted: Space Before: 5 pt, After: 5 pt

Formatted: Space Before: 5 pt, After: 5 pt

Formatted: Space Before: 5 pt, After: 5 pt

Formatted: Space Before: 5 pt, After: 5 pt

Formatted: Space Before: 5 pt, After: 5 pt

Formatted: Space Before: 5 pt, After: 5 pt

Formatted: Space Before: 5 pt, After: 5 pt

Formatted: Space Before: 5 pt, After: 5 pt

Formatted: Space Before: 5 pt, After: 5 pt

Formatted: Space Before: 5 pt, After: 5 pt

Formatted: Space Before: 5 pt, After: 5 pt

Formatted: Space Before: 5 pt, After: 5 pt

Section 13.1

21					0.107	0.160
22					0.084	
23					0.098	0.147
24					0.077	
25					0.090	0.135
26					0.071	
27					0.083	0.124
28					0.066	
29					0.078	0.117
30					0.061	
31					0.073	0.109
32					0.058	
33					0.068	0.102
34					0.054	
35					0.064	0.096
36					0.051	

Formatted: Right

Formatted: Space Before: 5 pt, After: 5 pt

Formatted: Space Before: 5 pt, After: 5 pt

Formatted: Space Before: 5 pt, After: 5 pt

Formatted: Space Before: 5 pt, After: 5 pt

Formatted: Space Before: 5 pt, After: 5 pt

Formatted: Space Before: 5 pt, After: 5 pt

Formatted: Space Before: 5 pt, After: 5 pt

Formatted: Space Before: 5 pt, After: 5 pt

Formatted: Space Before: 5 pt, After: 5 pt

Formatted: Space Before: 5 pt, After: 5 pt

Formatted: Right, Space Before: 5 pt, After: 5 pt

Formatted: Space Before: 5 pt, After: 5 pt

Formatted: Space Before: 5 pt, After: 5 pt

Formatted: Space Before: 5 pt, After: 5 pt

Formatted: Space Before: 5 pt, After: 5 pt

Formatted: Space Before: 5 pt, After: 5 pt

Formatted: Space Before: 5 pt, After: 5 pt

Formatted: Space Before: 5 pt, After: 5 pt

Formatted: Space After: 2 pt

Section 13.1

37					0.061	0.091
38					0.048	
39					0.058	0.087
40					0.046	
Note the higher limits for odd harmonics 21 and above are only allowable under certain conditions, if these higher limits are utilised please state the exemption used as detailed in part 6.2.3.4 of BS EN 61000-3-2 in the box below.						

Formatted: Space Before: 5 pt, After: 5 pt

Formatted: Space Before: 5 pt, After: 5 pt

Formatted: Space Before: 5 pt, After: 5 pt

Formatted: Space Before: 5 pt, After: 5 pt

Formatted: Space Before: 5 pt, After: 5 pt

Formatted: Space Before: 5 pt, After: 5 pt

Power Quality. Voltage fluctuations and Flicker. The tests should be carried out on a single **Generating Unit.** Results should be normalised to a standard source impedance or if this results in figures above the limits set in BS EN 61000-3-11 to a suitable Maximum Impedance.								
	Starting			Stopping			Running	
	d max	d c	d(t)	d max	d c	d(t)	P st	P lt 2 hours
Measured Values at test impedance								
Normalised to standard impedance								
Normalised to required maximum impedance								
Limits set under BS EN 61000-3-11	4%	3.3%	3.3%	4%	3.3%	3.3%	1.0	0.65

Formatted: Space Before: 5 pt, After: 5 pt

Formatted: Space Before: 5 pt, After: 5 pt

Formatted: Space Before: 5 pt, After: 5 pt

Formatted: Space Before: 5 pt, After: 5 pt

Formatted: Space Before: 5 pt, After: 5 pt

Formatted: Space Before: 5 pt, After: 5 pt

Section 13.1

Test Impedance	R		Ω	Xl		Ω
Standard Impedance	R	0.24 * 0.4 ^	Ω	Xl	0.15 * 0.25 ^	Ω
Maximum Impedance	R		Ω	Xl		Ω

* Applies to three phase and split single phase **Generating Unit**s

^ Applies to single phase **Generating Unit**s and **Generating Unit**s using two phases on a three phase system

For voltage change and flicker measurements the following formula is to be used to convert the measured values to the normalised values where the power factor of the generation output is 0.98 or above.

Normalised value = Measured value*reference source resistance/measured source resistance at test point

Single phase units reference source resistance is 0.4 Ω

Two phase units in a three phase system reference source resistance is 0.4 Ω

Two phase units in a split phase system reference source resistance is 0.24 Ω

Three phase units reference source resistance is 0.24 Ω

Where the power factor of the output is under 0.98 then the Xl to R ratio of the test impedance should be close to that of the Standard Impedance.

The stopping test should be a trip from full load operation.

The duration of these tests need to comply with the particular requirements set out in the testing notes for the technology under test. Dates and location of the test need to be noted below

Test start date		Test end date	
Test location			

Power quality. DC injection. The tests should be carried out on a single **Generating Unit** Tests are to be carried out three power defined levels ±5%. At 230V a 2kW single phase inverter has a current output of 8.7A so DC limit is 21.75mA, a 10kW three phase inverter has a current output of 43.5A at 230V so DC limit is 108.75mA

Test power level	10%	55%	100%	
Recorded value in Amps				
as % of				

Formatted: Right
Formatted: Space Before: 5 pt, After: 5 pt
Formatted: Space Before: 5 pt, After: 5 pt
Formatted: Space Before: 5 pt, After: 5 pt
Formatted: Space Before: 5 pt, After: 5 pt
Formatted: Space Before: 5 pt, After: 5 pt
Formatted: Space Before: 5 pt, After: 5 pt
Formatted: Space Before: 5 pt, After: 5 pt
Formatted: Space Before: 5 pt, After: 5 pt
Formatted: Space Before: 5 pt, After: 5 pt
Formatted: Space Before: 5 pt, After: 5 pt
Formatted: Space Before: 5 pt, After: 5 pt
Formatted: Space Before: 5 pt, After: 5 pt

Formatted: Space After: 2 pt

Section 13.1

rated AC current				
Limit	0.25%	0.25%	0.25%	

Formatted: Space Before: 5 pt, After: 5 pt

Power Quality. Power factor. The tests should be carried out on a single Generating Unit. Testa are to be carried out at three voltage levels and at full output. Voltage to be maintained within + or – 1.5% of the stated level during the test.				
	216.2V	230V	253V	Measured at three voltage levels and at full output. Voltage to be maintained within + or – 1.5% of the stated level during the test.
Measured value				
Limit	>0.95	>0.95	>0.95	

Formatted: Space Before: 5 pt, After: 5 pt

Formatted: Space Before: 5 pt, After: 5 pt

Formatted: Space Before: 5 pt, After: 5 pt

Formatted: Space Before: 5 pt, After: 5 pt

Section 13.1

Protection. Frequency tests						
Function	Setting		Trip test		"No-trip tests"	
	Frequency	Time delay	Frequency	Time delay	Frequency /time	Confirm no trip
O/F stage 1	51.5Hz	90s			51.3Hz 95s	
O/F stage 2	52Hz	0.5s			51.8Hz 89.98s	
					52.2Hz 0.48s	
U/F stage 1	47.5Hz	20s			47.7Hz 25s	
U/F stage 2	47Hz	0.5s			47.2Hz 19.98s	
					46.8 Hz 0.48s	
Note. For frequency Trip tests the Frequency required to trip is the setting ± 0.1Hz. In order to measure the time delay a larger deviation than the minimum required to operate the projection can be used.. The "No-trip tests" need to be carried out at the setting ± 0.2Hz and for the relevant times as shown in the table above to ensure that the protection will not trip in error.						

Protection. Voltage tests						
Function	Setting		Trip test		"No trip-tests" All phases at same voltage	
	Voltage	Time delay	Voltage	Time delay	Voltage /time	Confirm no trip
O/V stage 1	262.2V	1.0s			258.2V 2.0 sec	
O/V stage 2	273.7V	0.5s			269.7V 0.98s	
					277.7V 0.48s	

Formatted: Right

Formatted: Space Before: 5 pt, After: 5 pt

Formatted: Space After: 2 pt

Section 13.1

U/V stage 1	200.1V	2.5s			204.1V 3.5s	
U/V stage 2	184V	0.5s			188V 2.48s	
					180v 0.48 sec	

Note. For voltage tests the voltage required to trip is the setting plus or minus 3.45V. The time delay can be measured at a larger deviation than the minimum required to operate the projection. The No-trip tests need to be carried out at the setting ±4V and for the relevant times as shown in the table above to ensure that the protection will not trip in error.

a) Protection. Loss of Mains test and single phase test. The tests are to be To be carried out at three output power levels plus or minus 5%, an alternative for inverter connected Generating Units can be used instead.

To be carried out at three output power levels plus or minus 5%, an alternative for inverter connected Generating Units can be used instead.

Test Power	10%	55%	100%	10%	55%	100%
Balancing load on islanded network	95% of **Generating Unit** output	95% of **Generating Unit** output	95% of **Generating Unit** output	105% of **Generating Unit** output	105% of **Generating Unit** output	105% of **Generating Unit** output
Trip time. Limit is 0.5s						

Note. For technologies which have a substantial shut down time this can be added to the 0.5s in establishing that the trip occurred in less than 0.5s maximum. Shut down time could therefore be up to 1.0s for these technologies.

Indicate additional shut down time included in above results	s

Note as an alternative, inverters can be tested to BS EN 62116. The following sub set of tests should be recorded in the following table.

Test Power and imbalance	33% -5% Q Test 22	66% -5% Q Test 12	100% -5% P Test 5	33% +5% Q Test 31	66% +5% Q Test 21	100% +5% P Test 10
Trip time.						

Formatted: Space Before: 5 pt, After: 5 pt
Formatted: Space Before: 5 pt, After: 5 pt
Formatted: Space Before: 5 pt, After: 5 pt
Formatted: Space Before: 5 pt, After: 5 pt
Formatted: Space Before: 5 pt, After: 5 pt
Formatted: Space Before: 5 pt, After: 5 pt
Formatted: Space Before: 5 pt, After: 5 pt
Formatted: Space Before: 5 pt, After: 5 pt
Formatted: Space Before: 5 pt, After: 5 pt
Formatted: Space Before: 5 pt, After: 5 pt
Formatted: Space Before: 5 pt, After: 5 pt
Formatted: Space Before: 5 pt, After: 5 pt
Formatted: Space Before: 5 pt, After: 5 pt
Formatted: Space Before: 5 pt, After: 5 pt

Section 13.1

Limit is 0.5s						
Single phase test for multi phase **Generating Units**. Confirm that when generating in parallel with a network operating at around 50Hz with no network disturbance, that the removal of a single phase connection to the **Generating Unit**, with the remaining phases connected causes a disconnection of the generating unit within a maximum of 1s.						
Ph1 removed	Confirm Trip	Ph2 removed	Confirm Trip	Ph3 removed	Confirm Trip	

b) Protection. Frequency change, Stability test				
	Start Frequency	Change	~~End Frequency~~	Confirm no trip
Positive Vector Shift	49.5Hz	+9 degrees		
Negative Vector Shift	50.5Hz	- 9 degrees		
~~Positive Frequency drift~~	~~49.5Hz~~	~~+0.19Hzs^{-1}~~	~~51.5Hz~~	
~~Negative Frequency drift~~	~~50.5Hz~~	~~-0.19Hzs^{-1}~~	~~47.5Hz~~	

Loss-of-Mains (LOM) Protection Tests – RoCoF for Small Power Stations										
Calibration and Accuracy Tests										
Ramp in range 49.0-51.0Hz	**Pickup (+ / -0.025Hzs^{-1})**				**Relay Operating Time** RoCoF= **+0.05 / 0.10Hzs^{-1}** above setting					
Setting = 0.5 / 1.0 Hzs^{-1}	Lower Limit	Measured Value	Upper Limit	Result	Test Condition	Lower Limit	Measured Value	Upper Limit		
Increasing Frequency	*0.475* *0.975*		*0.525* *1.025*	Pass/Fail	0.55 Hzs^{-1} 1.10 Hzs^{-1}	*>0.5s*		~~*<1.0s*~~	P	
Reducing Frequency	*0.475* *0.975*		*0.525* *1.025*	Pass/Fail	0.55 Hzs^{-1} 1.1 Hzs^{-1}	*>0.5s*		~~*<1.0s*~~	P	
Stability Tests										
Ramp in range 49.0-51.0Hz	Test Condition		Test frequency ramp		Test Duration	Confirm No Trip				
Inside Normal band	< RoCoF		0.45Hzs^{-1}		4.4s				Pa	

Formatted: Right

Formatted: Space Before: 5 pt, After: 5 pt

Formatted: Space Before: 5 pt, After: 5 pt

Formatted: Space Before: 5 pt, After: 5 pt

Formatted: Space Before: 5 pt, After: 5 pt

Formatted: Space Before: 5 pt, After: 5 pt

Formatted: Space Before: 5 pt, After: 5 pt

Formatted: Space Before: 5 pt, After: 5 pt

Formatted: Space Before: 5 pt, After: 5 pt

Formatted Table

Formatted: Space Before: 5 pt, After: 5 pt

Formatted: Space Before: 5 pt, After: 5 pt, Line spacing: single

Formatted Table

Formatted: Space Before: 5 pt, After: 5 pt, Line spacing: single

Formatted: Space Before: 5 pt, After: 5 pt, Line spacing: single

Formatted: Space Before: 5 pt, After: 5 pt, Line spacing: single

Formatted: Space Before: 5 pt, After: 5 pt, Line spacing: single

Formatted: Space Before: 5 pt, After: 5 pt, Line spacing: single

Formatted: Space Before: 5 pt, After: 5 pt, Line spacing: single

Formatted: Space Before: 5 pt, After: 5 pt, Line spacing: single

Formatted: Space Before: 5 pt, After: 5 pt, Line spacing: single

Formatted: Space Before: 5 pt, After: 5 pt, Line spacing: single

Formatted: Space After: 2 pt

	(increasing f)	0.95 Hzs^{-1}			
Inside Normal band	< RoCoF (reducing f)		2.1s		
Additional Comments / Observations:					

Formatted: Space Before: 5 pt, After: 5 pt, Line spacing: single

Formatted: Space Before: 5 pt, After: 5 pt

Formatted: Space Before: 5 pt, After: 5 pt

c) **Protection. Re-connection timer**. The tests should prove that the reconnection sequence starts in no less than 20s for restoration of voltage and frequency to within the stage 1 settings of table 10.5.7.1					
Test should prove that the reconnection sequence starts in no less than 20s for restoration of voltage and frequency to within the stage 1 settings of table 10.5.7.1					
Time delay setting (s)	Measured delay (s)	Checks on no reconnection when voltage or frequency is brought to just outside stage 1 limits of table 10.5.7.1.			
		At 266.2V	At 196.1V	At 47.4Hz	At 51.6Hz
Confirmation that the **Generating Unit** does not re-connect					

Formatted: Space Before: 5 pt, After: 5 pt

Formatted: Space Before: 5 pt, After: 5 pt

Formatted: Space Before: 5 pt, After: 5 pt

Formatted: Space Before: 5 pt, After: 5 pt

Formatted: Space Before: 5 pt, After: 5 pt

d) Fault level contribution.					
For machines with electro-magnetic output			For Inverter output		
Parameter	Symbol	Value	Time after fault	Volts	Amps
Peak Short Circuit current	i_p		20ms		
Initial Value of aperiodic current	A		100ms		
Initial symmetrical short-circuit current*	I_k		250ms		
Decaying (aperiodic) component of short circuit current*	i_{DC}		500ms		
Reactance/Resistance Ratio of source*	X/R		Time to trip		In seconds

Formatted: Space Before: 5 pt, After: 5 pt

Formatted: Space Before: 5 pt, After: 5 pt

Formatted: Space Before: 5 pt, After: 5 pt

Formatted: Space Before: 5 pt, After: 5 pt

Formatted: Space Before: 5 pt, After: 5 pt

Formatted: Space Before: 5 pt, After: 5 pt

Formatted: Space Before: 5 pt, After: 5 pt

Formatted: Space Before: 5 pt, After: 5 pt

Section 13.1

For rotating machines and linear piston machines the test should produce a 0s – 2s plot of the short circuit current as seen at the **Generating Unit** terminals.

* Values for these parameters should be provided where the short circuit duration is sufficiently long to enable interpolation of the plot

Formatted: Right

Formatted: Space Before: 5 pt, After: 5 pt

Formatted: Space After: 2 pt

Section 13.1

e) Self Monitoring solid state switching	Yes/NA
It has been verified that in the event of the solid state switching device failing to disconnect the **Generating Unit**, the voltage on the output side of the switching device is reduced to a value below 50 Volts within 0.5 seconds	

Formatted: Space Before: 5 pt, After: 5 pt

Formatted: Space Before: 5 pt, After: 5 pt

Additional comments

Formatted: Space Before: 5 pt, After: 5 pt

Formatted: Space Before: 5 pt, After: 5 pt

Section 13.2

13.2 Generating Plant Installation and Commissioning Confirmation

Commissioning Confirmation Form for all Installations								
To	ABC electricity distribution 99 West St, Imaginary Town, ZZ99 9AA				DNO or IDNO abced@wxyz.com			
Installer or Generator Details :								
Installer								
Accreditation/Qualification								
Address								
Post Code								
Contact person								
Telephone Number								
E-mail address								
Installation Details								
Site Contact Details								
Address								
Post Code								
Site Telephone Number								
MPAN(s)								
Location within Customer's Installation								
Location of Lockable Isolation Switch								
Details of Generating Unit(s) - where applicable								
Manufacturer / Reference	Date of Installation	Technology Type	G83 / G59	Type Test Ref No.	**Generating Unit installed capa kW**			
					3-Phase Units	Single Phase Units		
						PH1	PH2	PH3

Formatted: Right
Formatted: Space Before: 5 pt, After: 5 pt
Formatted: Space Before: 5 pt, After: 5 pt
Formatted: Space Before: 5 pt, After: 5 pt, Line spacing: single
Formatted: Space Before: 5 pt, After: 5 pt, Line spacing: single
Formatted: Space Before: 5 pt, After: 5 pt
Formatted: Space Before: 5 pt, After: 5 pt, Line spacing: single
Formatted: Space Before: 5 pt, After: 5 pt
Formatted: Space Before: 5 pt, After: 5 pt, Line spacing: single
Formatted: Space Before: 5 pt, After: 5 pt
Formatted: Space Before: 5 pt, After: 5 pt, Line spacing: single
Formatted: Space Before: 5 pt, After: 5 pt
Formatted: Space Before: 5 pt, After: 5 pt, Line spacing: single
Formatted: Space Before: 5 pt, After: 5 pt
Formatted: Space Before: 5 pt, After: 5 pt, Line spacing: single
Formatted: Space Before: 5 pt, After: 5 pt
Formatted: Space Before: 5 pt, After: 5 pt, Line spacing: single
Formatted: Space Before: 5 pt, After: 5 pt
Formatted: Space Before: 5 pt, After: 5 pt, Line spacing: single
Formatted: Space Before: 5 pt, After: 5 pt
Formatted: Space Before: 5 pt, After: 5 pt, Line spacing: single
Formatted: Space Before: 5 pt, After: 5 pt
Formatted: Space Before: 5 pt, After: 5 pt, Line spacing: single
Formatted: Space Before: 5 pt, After: 5 pt
Formatted: Space Before: 5 pt, After: 5 pt, Line spacing: single
Formatted: Space Before: 5 pt, After: 5 pt
Formatted: Space Before: 5 pt, After: 5 pt, Line spacing: single
Formatted: Space Before: 5 pt, After: 5 pt
Formatted: Space Before: 5 pt, After: 5 pt, Line spacing: single
Formatted: Space Before: 5 pt, After: 5 pt
Formatted ...
Formatted: Space Before: 5 pt, After: 5 pt
Formatted ...
Formatted ...
Formatted: Space Before: 5 pt, After: 5 pt

Information to be enclosed	
Description	Confirma
Final copy of circuit diagram	Yes / No*
Generating Unit Type Test Reference Number, or for **Generating Units** not yet listed on the ENA web site a completed **Generating Unit** Type Test Sheet	Yes / No*
Schedule of protection settings (may be included in circuit diagram)	Yes / No*
Commissioning Checks	
Installation satisfies the requirements of BS7671 (IET Wiring Regulations).	Yes / No*
Suitable lockable points of isolation have been provided between the **Generating Units** and the rest of the installation.	Yes / No*
Labels have been installed at all points of isolation in accordance with EREC G59.	Yes / No*
Interlocking that prevents **Generating Unit**s being connected in parallel with the **DNO** system (without synchronising) is in place and operates correctly.	Yes / No*
The **Interface Protection** settings have been checked and comply with EREC G59	Yes / No*
Generating Units successfully synchronise with the **DNO** system without causing significant voltage disturbance.	Yes / No*
Generating Units successfully run in parallel with the DNO system without tripping and without causing significant voltage disturbances.	Yes / No*
Generating Units successfully disconnect without causing a significant voltage disturbance, when they are shut down.	Yes / No*
Interface Protection operates and disconnects the **Generating Unit**s quickly (within 1s) as required by section 12.3.1 (g)	Yes / No*
Generating Unit(s) remain disconnected for at least 20s after switch is reclosed.	Yes / No*
Loss of tripping and auxiliary supplies Where applicable, loss of supplies to tripping and protection relays results in either **Generating Unit** lockout or an alarm to a 24hr manned control centre.	Yes / No*

Formatted: Space After: 2 pt

Formatted: Space Before: 5 pt, After: 5 pt, Line spacing: single

Formatted: Space Before: 5 pt, After: 5 pt, Line spacing: single

Formatted: Space Before: 5 pt, After: 5 pt

Formatted: Space Before: 5 pt, After: 5 pt, Line spacing: single

Formatted: Space Before: 5 pt, After: 5 pt

Formatted: Space Before: 5 pt, After: 5 pt

Formatted: Space Before: 5 pt, After: 5 pt

Formatted: Space Before: 5 pt, After: 5 pt

Formatted: Space Before: 5 pt, After: 5 pt

Formatted: Space Before: 5 pt, After: 5 pt

Formatted: Space Before: 5 pt, After: 5 pt

Formatted: Space Before: 5 pt, After: 5 pt

Formatted: Space Before: 5 pt, After: 5 pt

Formatted: Space Before: 5 pt, After: 5 pt

Formatted: Space Before: 5 pt, After: 5 pt

Formatted: Space Before: 5 pt, After: 5 pt

Formatted: Space Before: 5 pt, After: 5 pt

Formatted: Space Before: 5 pt, After: 5 pt

Section 13.2

Balance of Multiple Single Phase Generating Units Confirm that design of the complete installation has been carried out to limit output power imbalance to below 16A/phase, as required by section 7.5 of EREC G59	Yes / No*
Additional Comments / Observations:	
Declaration – to be completed by Installer for Power Stations under 50kW or by the Generator for Power Stations above 50kW	
I declare that the **Generating Unit**s and the installation which together form a **Power Station** at the a address, comply with the requirements of EREC G59/3 and the commissioning checks have been successfully completed. *The **Power Station** comprises only **Generating UnitsType Tested** to EREC G59 or EREC G83/2 or later, or *part or all of this **Power Station** contains **Generating Units** not **Type Tested** to EREC G59 or EREC G83 and the **Generating Plant** Installation and Commissioning tests form (Appendix 13.3) has been completed in addition to this form.	
* Delete the part which does not apply.	
Signature:	Date:

* Circle as appropriate. If "No" is selected the **Power Station** is deemed to have failed the commissioning tests and the **Generating Units** shall not be put in service.

Formatted: Right

Formatted: Space Before: 5 pt, After: 5 pt

Formatted: Space Before: 5 pt, After: 5 pt

Formatted: Space Before: 5 pt, After: 5 pt

Formatted: Space Before: 5 pt, After: 5 pt

Formatted: Space Before: 5 pt, After: 5 pt

Formatted: Space Before: 5 pt, After: 5 pt

Formatted: Space After: 2 pt

13.3 Generating Plant Installation and Commissioning Tests

Commissioning test requirements for non-Type Tested Generating Units in addition to those required in Appendix 13.2

Formatted Table

Details of Loss of Mains Protection				
Manufacturer	Manufacturer's type	Date of Installation	Settings	Other information

Over and Under Voltage Protection Tests LV											
Calibration and Accuracy Tests											
Phase	Setting	Time Delay	**Pickup Voltage**				~~Time Delay~~Relay Operating Time **- step from 230V to test value**				
Stage 1 Over Voltage			Lower Limit	Measured Value	Upper Limit	Result	Test Value	Lower Limit	Measured Value	Upper Limit	Result
L1 - N	**262.2V** 230V system	**1.0s**	*258.75*		*265.65*	Pass/Fail	266.2	*1.0s*		*1.1s*	Pass/Fail
L2 - N						Pass/Fail					Pass/Fail
L3 - N						Pass/Fail					Pass/Fail
Stage 2 Over Voltage			Lower Limit	Measured Value	Upper Limit	Result	Test Value	Lower Limit	Measured Value	Upper Limit	Result
L1 - N	**273.7V** 230V system	0.5s	*270.25*		*277.15*	Pass/Fail	277.7	*0.5s*		*0.6s*	Pass/Fail
L2 - N						Pass/Fail					Pass/Fail
L3 - N						Pass/Fail					Pass/Fail
Stage 1 Under Voltage			Lower Limit	Measured Value	Upper Limit		Test Value	Lower Limit	Measured Value	Upper Limit	Result
L1 - N	**200.1V** 230V system	2.5s	*196.65*		*203.55*	Pass/Fail	196.1	*2.5s*		*2.6s*	Pass/Fail
L2 - N						Pass/Fail					Pass/Fail
L3 - N						Pass/Fail					Pass/Fail

Section 13.3

Formatted: Right

Stage 2 Under Voltage			Lower Limit	Measured Value	Upper Limit		Test Value	Lower Limit	Measured Value	Upper Limit	Result
L1 - N	**184.0V** 230V system	0.5s	*180.55*		*187.45*	Pass/Fail	180	*0.5s*		*0.6s*	Pass/Fail
L2 - N						Pass/Fail					Pass/Fail
L3 - N						Pass/Fail					Pass/Fail

Formatted: Space After: 2 pt

Over and Under Voltage Protection Tests LV

Stability Tests							
Test Description	Setting	Time Delay	Test Condition (3-Phase Value)	Test Voltage all phases ph-n	Test Duration	Confirm No Trip	Result
Inside Normal band	---------	---------	< OV Stage 1	258.2V	5.00s		Pass/Fail
Stage 1 Over Voltage	**262.2V**	**1.0s**	> OV Stage 1	269.7V	0.95s		Pass/Fail
Stage 2 Over Voltage	**273.7V**	**0.5s**	> OV Stage 2	277.7V	0.45s		Pass/Fail
Inside Normal band	---------	---------	> UV Stage 1	204.1V	5.00s		Pass/Fail
Stage 1 Under Voltage	**200.1V**	**2.5s**	< UV Stage 1	188V	2.45s		Pass/Fail
Stage 2 Under Voltage	**184.0V**	**0.5s**	< UV Stage 2	180V	0.45s		Pass/Fail

Overvoltage test - Voltage shall be stepped from 258V to the test voltage and held for the test duration and then stepped back to 258V.

Undervoltage test – Voltage shall be stepped from 204.1V to the test voltage and held for the test duration and then stepped back to 204.1V

Additional Comments / Observations::

Section 13.3

Formatted: Right

Over and Under Voltage Protection Tests HV
referenced to 110V ph-ph VT output

Calibration and Accuracy Tests											
Phase	Setting	Time Delay	Pickup Voltage				~~Time Delay~~Relay Operating Time measured value plus or minus 2V				
Stage 1 Over Voltage			Lower Limit	Measured Value	Upper Limit	Result	Test Value	Lower Limit	Measured Value	Upper Limit	Result
L1 - L2	**121V** 110V VT secondary	**1.0s**	*119.35*		*122.65*	Pass/Fail	Measured value plus 2V	*1.0s*		*1.1s*	Pass/Fail
L2 - L3						Pass/Fail					Pass/Fail
L3 - L1						Pass/Fail					Pass/Fail
Stage 2 Over Voltage			Lower Limit	Measured Value	Upper Limit	Result	Test Value	Lower Limit	Measured Value	Upper Limit	Result
L1 - L2	**124.3V** 110V VT secondary	0.5s	*122.65*		*125.95*	Pass/Fail	Measured value plus 2V	*0.5s*		*0.6s*	Pass/Fail
L2 - L3						Pass/Fail					Pass/Fail
L3 - L1						Pass/Fail					Pass/Fail
Stage 1 Under Voltage			Lower Limit	Measured Value	Upper Limit		Test Value	Lower Limit	Measured Value	Upper Limit	Result
L1 - L2	**95.70V** 110V VT secondary	2.5s	*94.05*		*97.35*	Pass/Fail	Measured value minus 2V	*2.5s*		*2.6s*	Pass/Fail
L2 - L3						Pass/Fail					Pass/Fail
L3 - L1						Pass/Fail					Pass/Fail
Stage 2 Under Voltage			Lower Limit	Measured Value	Upper Limit		Test Value	Lower Limit	Measured Value	Upper Limit	Result
L1 - L2	**88.00V** 110V VT secondary	0.5s	*86.35*		*89.65*	Pass/Fail	Measured value minus 2V	*0.5s*		*0.6s*	Pass/Fail
L2 - L3						Pass/Fail					Pass/Fail
L3 - L1						Pass/Fail					Pass/Fail

Formatted: Space After: 2 pt

Over and Under Voltage Protection Tests HV

referenced to 110V ph-ph VT output (Secondary voltages are indicated for convenience, where different VT nominal outputs are present these values should be re-calculated using an appropriate ratio**)**

Stability Tests							
Test Description	Setting	Time Delay	Test Condition (3-Phase Value)	Test Voltage All phases ph-ph	Test Duration	Confirm No Trip	Result
Inside Normal band	---------	---------	< OV Stage 1	119V	5.00s		Pass/Fail
Stage 1 Over Voltage	**121V**	**1.0s**	> OV Stage 1	122.3V	0.95s		Pass/Fail
Stage 2 Over Voltage	**124.3V**	**0.5s**	> OV Stage 2	126.3V	0.45s		Pass/Fail
Inside Normal band	---------	---------	> UV Stage 1	97.7V	5.00s		Pass/Fail
Stage 1 Under Voltage	**95.7V**	**2.5s**	< UV Stage 1	90V	2.45s		Pass/Fail
Stage 2 Under Voltage	**88V**	**0.5s**	< UV Stage 2	86V	0.45s		Pass/Fail

Additional Comments / Observations:

Section 13.3

Formatted: Right

Over and Under Frequency Protection Tests

Calibration and Accuracy Tests

Setting	Time Delay	Pickup Frequency				~~Time Delay~~Relay Operating Time				
Stage 1 Over Frequency		Lower Limit	Measured Value	Upper Limit	Result	Freq step	Lower Limit	Measured Value	Upper Limit	Result
51.5Hz	90s	*51.40*		*51.60*	Pass/Fail	51.2-51.8Hz	*90.0s*		*90.9s*	Pass/Fail
Stage 2 Over Frequency		Lower Limit	Measured Value	Upper Limit	Result	Freq step	Lower Limit	Measured Value	Upper Limit	Result
52Hz	0.5s	*51.90*		*52.10*	Pass/Fail	51.7-52.3Hz	*0.50s*		*0.60s*	Pass/Fail
Stage 1 Under Frequency		Lower Limit	Measured Value	Upper Limit	Result	Freq step	Lower Limit	Measured Value	Upper Limit	Result
47.5Hz	20s	*47.40*		*47.60*	Pass/Fail	47.8-47.2Hz	*20.0s*		*20.2s*	Pass/Fail
Stage 2 Under Frequency		Lower Limit	Measured Value	Upper Limit	Result	Freq step	Lower Limit	Measured Value	Upper Limit	Result
47Hz	0.5s	*46.90*		*47.1*	Pass/Fail	47.3-46.7Hz	*0.50s*		*0.60s*	Pass/Fail

Stability Tests

Test Description	Setting	Time Delay	Test Condition	Test Frequency	Test Duration	Confirm No Trip	Result
Inside Normal band	---------	---------	< OF Stage 1	51.3Hz	120s		Pass/Fail
Stage 1 Over Frequency	51.5Hz	90s	> OF Stage 1	51.7Hz	89.0s		Pass/Fail
Stage 2 Over Frequency	52Hz	0.5s	> OF Stage 2	52.2Hz	0.45s		Pass/Fail
Inside Normal band	---------	---------	> UF Stage 1	47.7Hz	30s		Pass/Fail
Stage 1 Under Frequency	47.5Hz	20s	< UF Stage 1	47.3Hz	19.5s		Pass/Fail
Stage 2 Under Frequency	47Hz	0.5s	< UF Stage 2	46.8Hz	0.45s		Pass/Fail

Overfrequency test - Frequency shall be stepped from 51.3Hz to the test frequency and held for the test duration and then stepped back to 51.3Hz.

Underfrequency test - Frequency shall be stepped from 47.7Hz to the test frequency and held for the test duration and then stepped back to 47.7Hz

Additional Comments / Observations:

Formatted: Space After: 2 pt

Note that the table below applies to all Small Power Stations ~~less than 5 MW capacity~~.

~~**The DNO will be able to provide, on request, corresponding figures for Power Stations of 5MW and above.**~~

~~**Loss-of-Mains (LOM) Protection Tests – RoCoF for Power Stations <5MW**~~								
~~**Calibration and Accuracy Tests**~~								
~~Ramp in range 49.5-50.5Hz~~	~~**Pickup (+ / -0.025Hzs^{-1})**~~				~~**Time Delay**~~ ~~RoCoF = ±**0.05Hz/s** above setting~~			
~~**Setting = 0.125 / 0.20 Hzs^{-1}**~~	~~Lower Limit~~	~~Measured Value~~	~~Upper Limit~~	~~Result~~	~~Test Condition~~	~~Measured Value~~	~~Upper Limit~~	~~Result~~
~~Increasing Frequency~~	~~*0.1*~~ ~~*0.175*~~		~~*0.15*~~ ~~*0.225*~~	~~Pass/Fail~~	~~0.175 Hzs^{-1}~~ ~~0.25 Hzs^{-1}~~		~~*<0.5s*~~	~~Pass/Fail~~
~~Reducing Frequency~~	~~*0.1*~~ ~~*0.175*~~		~~*0.15*~~ ~~*0.225*~~	~~Pass/Fail~~	~~0.175 Hzs^{-1}~~ ~~0.25 Hzs^{-1}~~		~~*<0.5s*~~	~~Pass/Fail~~
~~**Stability Tests**~~								
~~Ramp in range 49.5-50.5Hz~~	~~Test Condition~~		~~Test frequency ramp~~		~~Test Duration~~	~~Confirm No Trip~~		~~Result~~
~~Inside Normal band~~	~~< RoCoF (increasing f)~~		~~Higher of 0.075 Hzs^{-1} or ROCOF - 0.05 Hzs^{-1} = _____~~		~~5.0s~~			~~Pass/Fail~~
~~Inside Normal band~~	~~< RoCoF (reducing f)~~				~~5.0s~~			~~Pass/Fail~~

Loss-of-Mains (LOM) Protection Tests – RoCoF for Small Power Stations									
Calibration and Accuracy Tests									
Ramp in range 49.0-51.0Hz	**Pickup (+ / -0.025Hzs^{-1})**				~~**Time Delay**~~**Relay Operating Time** RoCoF= +**0.05 / 0.10Hzs^{-1}** above setting				
Setting = 0.5 / 1.0 Hzs^{-1}	Lower Limit	Measured Value	Upper Limit	Result	Test Condition	Lower Limit	Measured Value	Upper Limit	Result
Increasing Frequency	*0.475* *0.975*		*0.525* *1.025*	Pass/Fail	0.55 Hzs^{-1} 1.10 Hzs^{-1}	*>0.5s*		*<1.0s*	Pass/Fail
Reducing Frequency	*0.475* *0.975*		*0.525* *1.025*	Pass/Fail	0.55 Hzs^{-1} 1.1 Hzs^{-1}	*>0.5s*		*<1.0s*	Pass/Fail
Stability Tests									
Ramp in range 49.0-51.0Hz	Test Condition		Test frequency ramp		Test Duration	Confirm No Trip			Result
Inside Normal band	< RoCoF (increasing f)		0.45Hzs^{-1} 0.95 Hzs^{-1}		4.4s				Pass/Fail
Inside Normal band	< RoCoF (reducing f)				2.1s				Pass/Fail
Additional Comments / Observations:									

Section 13.3

Formatted: Right

~~Additional Comments / Observations:~~
h

Formatted: Space After: 2 pt

Loss-of-Mains (LOM) Protection Tests - Vector Shift								
Calibration and Accuracy Tests								
Vector Shift	Pickup (± 1.5 degree)				Time Delay Vector shift = 3 deg above setting			
Setting = 6 / 12 degrees	Lower Limit	Measured Value	Upper Limit	Result	Test Condition	Measured Value	Upper Limit	Result
Vector Shift : Lagging Angle	4.5 10.5		7.5 13.5	Pass/Fail	9 deg 15 deg		<0.5s	Pass/Fail
Vector Shift : Leading Angle	4.5 10.5		7.5 13.5	Pass/Fail	9 deg 15 deg		<0.5s	Pass/Fail

Stability Tests					
Test Description	Test Condition	Test vector shift	Test Duration	Confirm No Trip	Result
Inside Normal band	< Vector Shift (Lagging f)	Higher of 4 degrees or vector shift -2 degree =_____			Pass/Fail
Inside Normal band	< Vector Shift (Leading f)				Pass/Fail
Additional Comments / Observations:					

LoM Protection - Stability test				
	Start Frequency	Change	End Frequency	Confirm no trip
Positive Vector Shift	49.5Hz	+50 degrees		
Negative Vector Shift	50.5Hz	- 50 degrees		

Formatted: Font: (Default) Arial, 10 pt, Bold

Formatted: Normal, Indent: Left: 0.63 cm, Space Before: 5 pt, After: 5 pt, No bullets or numbering

Formatted: Font: (Default) Arial, 10 pt, Bold

Formatted: Space Before: 5 pt, After: 5 pt

Formatted: Space Before: 5 pt, After: 5 pt

Formatted: Space Before: 5 pt, After: 5 pt

Section 13.3

~~Positive Frequency drift~~	~~49.5Hz~~	~~+0. 95Hzs~~[1]	~~51.5Hz~~	
~~Negative Frequency drift~~	~~50.5Hz~~	~~-0.95Hzs~~[1]	~~47.5Hz~~	

Formatted: Right

Formatted: Space Before: 5 pt, After: 5 pt

Formatted: Space Before: 5 pt, After: 5 pt

Formatted: Space Before: 5 pt, After: 5 pt

Insert here any additional tests which have been carried out

Declaration – to be completed by Generator or Generators Appointed Technical Representative.	
I declare that the **Generating Unit** and the installation comply with the requirements of EREC G59/3 and the additional commissioning checks noted above have been successfully completed in addition to those required for all **Generating Unit** installations (see Appendix 13.2)	
Signature:	Date:
Position.	
Declaration – to be completed by DNO Witnessing Representative	
I confirm that I have witnessed the tests in this document on behalf of _____ and that the results are an accurate record of the tests	
Signature:	Date:

Formatted: Space After: 2 pt

13.4 Generating Plant Decommissioning Confirmation

Confirmation of the decommissioning of a **Generating Plant** connected in parallel with the public **Distribution System** – in accordance with Engineering Recommendation G59/3.

Site Details	
Site Address (inc. post code)	
Telephone number	
MPAN(s)	
Distribution Network Operator (DNO)	
Generating Plant Details	
Manufacturer and model type	
Serial number of each **Generating Unit**	
Rating (kVA)	
Type of prime mover and fuel source	

Decommissioning Agent Details		
Name		
Accreditation/Qualification:		
Address (incl post code)		
Contact person		
Telephone Number		
Fax Number		
E-mail address		
Name:	Signature:	Date:

Formatted: Space Before: 5 pt, After: 5 pt

Formatted: Right

13.5 Application for connection of Type Tested Generating Units with total aggregate Power Station capacity <50kW 3 phase or 17kW single phase.

Application for Connection of Type Tested Generating Unit(s)
with Total Aggregate Capacity < 50kW 3-Phase, or <17kW Single Phase

Formatted: Space Before: 5 pt, After: 5 pt
Formatted Table

To ABC electricity distribution DNO or IDNO
99 West St, Imaginary Town, ZZ99 9AA abced@wxyz.com

Formatted: Space Before: 5 pt, After: 5 pt

Installer or Generator Details :	
Installer or Generator.	
Accreditation/Qualification	
Address	
Post Code	
Contact person	
Telephone Number	
E-mail address	
Installation Details	
Address	
Post Code	
MPAN(s)	

Formatted: Space Before: 5 pt, After: 5 pt

Details of Existing Generating Unit(s) - where applicable

Manufacturer / Reference	Approximate Date of Installation	Technology Type	G83 / G59	Type Test Ref No. if available	**Generating Unit installed capacity kW**				Power Factor
					3-Phase Units	Single Phase Units			
						PH1	PH2	PH3	

Details of Proposed Additional Generating Unit(s):

Manufacturer / Reference	Proposed Date of Installation	Technology Type	G83 / G59	Type Test Ref No.	Generating Unit installed capacity kW				
					3-Phase Units	Single Phase Units			Power Factor
						PH1	PH2	PH3	
Balance of Multiple Single Phase Generating Units – where applicable									
I confirm that design of the complete installation has been carried out to limit output power imbalance to below 16A/phase, as required by EREC G59									
Signed :				Date :					

Use continuation sheet where required.

Record **Generating Unit** capacities, in rated output kW at 230V AC, to one decimal place, under PH1 for single phase supplies and under the relevant phase for two and three phase supplies.

Detail on a separate sheet if there are any proposals to limit export to a lower figure than the aggregate rating of all **Generating Units** in the **Power Station**

Formatted: Space After: 2 pt

Formatted: Space Before: 5 pt, After: 5 pt

Formatted: Space Before: 5 pt, After: 5 pt

Formatted: Space Before: 5 pt, After: 5 pt

Formatted: Space Before: 5 pt, After: 5 pt

Formatted: Space Before: 5 pt, After: 5 pt

Formatted: Space Before: 5 pt, After: 5 pt

Section 13.6

Formatted: Right

13.6 Additional Information Relating to System Stability Studies

13.6.1 System Stability

Stability is an important issue for secure and reliable power system operation. Consequently **System Stability** considerations deserve attention when developing **Generating Plant** connection design and operating criteria. Power **System Stability** is defined as the ability of a power system to remain in a state of operating equilibrium under normal operating conditions and to regain an acceptable state of equilibrium after it has been subjected to a disturbance. When subjected to a disturbance, the stability of the system depends on the initial system operating condition as well as the severity of the disturbance (eg small or large). Small disturbances in the form of load changes or operational network switching occur continually; the stable system must be able to adjust to the changing conditions and operate satisfactorily. The system must also be able to survive more severe disturbances, such as a short circuit or loss of a large **Generating Plant**. If following a disturbance the system is unstable, it will usually experience a progressive increase in angular separation of synchronous **Generating Units'** rotors from the system, or an uncontrolled increase in the speed of asynchronous **Generating Units'** rotors, or a progressive decrease in system voltages. An unstable system condition could also lead to cascading outages and ultimately to a system blackout.

The loss of **System Stability** is often related to inability of synchronous **Generating Unit**s to remain in **Synchronism** after being subjected to a disturbance, either small or large. Loss of **Synchronism** can occur between one synchronous **Generating Plant** and the rest of the system, or between groups of synchronous **Generating Plants**, with **Synchronism** being maintained within each group after separating from each other. Small disturbances arise frequently as a result of normal load variations and switching operations. Such disturbances cause electro-mechanical rotor oscillations, which are generally damped out by the inertia of the **Generating Unit**s, system impedance and loads connected to the **Distribution System**. Where damping is inadequate, **Power System Stabilisers** (PSSs) may offer a solution**.**

Undamped oscillations which result in sustained voltage and power swings, and even loss of **Synchronism** between synchronous **Generating Unit**s, can arise following a small disturbance if either

- the transfer capability of the interconnecting **Distribution System** is insufficient; or
- the control and load characteristics either singly or in combination are such that inadequate or negative damping, or reduced synchronising torque occurs.

Large disturbances, such as a 3-phase short circuit fault or circuit outage, can result in large excursions of synchronous **Generating Units** rotor angles (ie angular separation) due to insufficient synchronising torque. The associated stability problem is then concerned with the ability of the system to maintain **Synchronism** when subjected to such a disturbance. Normally the most arduous case occurs when the summer minimum demand coincides with the maximum power output of the synchronous **Generating Plant**.

Formatted: Space After: 2 pt

During a fault the electrical output of each synchronous **Generating Unit** may be substantially less than the mechanical input power from its prime mover and the excess energy will cause the rotor to accelerate and increase the electrical angle relative to the power system. Provided that the fault is disconnected quickly, the synchronous **Generating Unit** controls respond rapidly and with adequate **Distribution System** connections remaining post-fault, the acceleration will be contained and stability maintained. Pole slipping could occur and if the acceleration is not contained, this will cause large cyclic exchanges of power between the synchronous **Generating Unit** and the **Distribution System**. These may damage synchronous **Generating Units**, cause maloperation of **Distribution System** protection and produce unacceptable voltage depressions in supply systems.

In the case of some types of asynchronous **Generating Plant**, the voltage depression on the local **Distribution System** will cause acceleration of the rotor (increasing slip), with subsequent increased reactive demand. For prolonged faults this may cause the asynchronous **Generating Unit** to go past its breakaway torque point and result in loss of stable operation and subsequent **Generating Plant** disconnection

In the case of doubly fed asynchronous **Generating Plant** and series converter connected **Generating Plant**, a voltage depression on the local **Distribution System** may cause the AC-DC-AC converter to rapidly disconnect, with subsequent fast disconnection of the machine leading to a potential loss of **System Stability.**

In the case of embedded **Medium** and **Large Power Station**s the capability to ride through certain **Transmission System** faults is critical to **Distribution System** and **Total System** stability. The **Grid Code** "fault ride through" requirements CC.6.3.15 apply to these **Power Stations.**

Where larger synchronous **Generating Plant**s are installed consideration should be given by the **Generator** and the **DNO** (in conjunction with **NETSO** where necessary) for the need to provide pole-slipping protection. The 'reach' (ie impedance locus) of any settings applied to such a protection should be agreed between the **Generator** and the **DNO**. The settings should be optimised, with the aim of rapidly disconnecting generation in the event of pole-slipping, whilst maintaining stability of the protection against other disturbances such as load changes.

Stability investigations for new **Generating Plant**s will initially need to use data that has been estimated from Manufacturer's designs. On occasions, the machine size and/or equipment dynamic parameters change, and the studies may need to be repeated later during the project.

Section 13.6

Formatted: Right

13.6.2 Clearance times

A **Distribution System** can be subjected to a wide range of faults of which the location and fault type cannot be predicted. The **System Stability** should therefore be assessed for the fault type and location producing the most onerous conditions. It is recommended that three phase faults be considered.

The operating times of the equipment that have to detect and remove a fault from the system are critical to **System Stability**. Worst case situations for credible fault conditions will need to be studied, the fault locations selected for examination being dependent upon protection fault clearance times. Stability will normally be assessed on the basis of the slowest combination of the operating times of main protection signalling equipment and circuit breakers. Fault clearance times therefore need to include the operating times of protection relays, signalling, trip relays and circuit breakers.

Faster clearance times may become necessary where studies indicate that the risk to **System Stability** is unacceptable. Single phase to earth fault clearance times can be protracted but their effects on the **System Stability** are likely to be less disruptive than a three-phase fault. Each case to be studied should be considered on an individual basis in order to determine acceptable fault clearance times.

13.6.3 Power System Stabilizers

In general, **Power System Stabiliser**s should provide positive system damping of oscillations in the frequency range from 0 to 5Hz. The gain of the **Power System Stabiliser** shall be such that an increase in the gain by a factor of at least 2 shall not cause instability. **Generating Unit**s in embedded **Medium** and **Large Power Station**s will need to be studied in the context of the **Total System**, in conjunction with **NETSO**, and will need to satisfy the requirements of the **Grid Code**.

Voltage fluctuations resulting from inadequate damping of control systems require study at the **Point of Common Coupling** (PCC) and must be compliant with ER P28.

Formatted: Space After: 2 pt

13.7 Loss of Mains (LoM) Protection Analysis

The following analysis for LoM protection includes the results of practical measurements. The attached analysis of the problem demonstrates the speed with which a **Generating Unit** can move out of **Synchronism** and the consequences for the unit of a reclosure on the **Distribution System**.

13.7.1 Prime Mover Characteristics

A Modern **Generating Unit** can be of four types:-

1. Synchronous **Generating Unit**: Where the stator frequency defined by the rotational speed of the applied dc magnetic field in the rotor winding. The two being magnetically locked together, with the rotor magnetic field being at a slight advance (10-20 electrical degrees) of the Stator in order to generate. When connected to a large electrical network both will track the applied frequency. The electrical inertia constant H of the generator will be in the order of 3-5 seconds (time to decrease the frequency by 50% for a 100% increase in load).

2. Asynchronous **Generating Unit**: Where the stator frequency is determined by the large electrical network it is connected to. The rotating stator field then induces a rotating magnetic field in the rotor winding. To generate, this winding will be rotating at a marginally faster speed to this induced rotating frequency (-1 to -2% slip) in order to generate. The electrical inertia constant H of the generator will be in the order of 4-5 seconds.

3. Doubly Fed Induction **Generating Unit** (DFIG): Similar to the Asynchronous generator and usually found in wind turbines. Here the rotor is directly energised by a back to back voltage source converter (VSC). This creates in the rotor a variable frequency, in magnitude and phase, which allows the generator rotor to operate over a wider speed range than the 1-2% of an Asynchronous generator. Typically +/-20% speed range is possible. The electrical inertia of the generator is less clearly defined as the rotor is effectively decoupled from the stator, but typically it is given as 4 to 5 seconds before the secondary control systems can react in a similar time period.

4. Converter Connected **Generating Unit** (CCGU): Whilst the DFIG is partly coupled to the network through the stator, here the power source is completely hidden behind the converter and the generator is fully decoupled from the network. The electrical inertia of the generator is theoretically zero unless a degree of 'virtual inertia' is introduced into the converter control scheme, to make the generator behave as if it were closely coupled to the network.

LoM protection systems follow two interrelated principles:

- Rate of Change of Frequency or RoCoF (of voltage)
- Vector Shift or Vector Surge (of voltage)

Both situations can arise from an imbalance between the power applied to the prime mover (and hence generator) and the power thus sent out into the

Section 13.7

Formatted: Right

network to supply load. There is a presumption, with both types of relays, that an unbalance in load always exists when a generator is disconnected (Islanded) from the large electrical network. And this is then of sufficient magnitude to cause the generator to accelerate or de-accelerate (depending on its electrical inertia constant H) so changing the frequency of the generated voltage at a sufficient rate to be detected. This is assumed to be in the order of 10%.

Even if the generator remains connected, sudden changes to the impedance of the distribution network, caused by switching, or a sudden load change, can have a similar but smaller effect until a new stable operating point is achieved. This is quite common, especially on weak (low fault level) overhead networks. This is not a LoM event, but is known to cause mal-operation of LoM relays unless properly accounted for.

Generally RoCoF detection is able to discriminate better between true and false LoM events than Vector Shift is. The latter can be fooled by a sudden network impedance change and is therefore best suited to firm urban networks where remote circuit switching has minimal effects on the system fault level. Hence the need for the k factors in the protection table in section 10.5.7.1. Note that no further vector shift protection will be allowed for Generating Units commissioned after ~~01 March 2018~~01 Feb 2018

The initial change in frequency following the change in load is essentially a function of the inertia constant H of the combination of the **Generating Unit** and its Prime Mover. The derivation of the transient frequency response is given in section 2 below.

Note that these equations only truly apply to generator types 1 and 2 and to the initial (1-2 second) response for type 3. For type 4 generators discussions with the generator manufacturer may be required to determine if any form of LoM relay would provide effective protection.

13.7.2 Analysis of Dynamic Behaviour of Generating Unit Following Load Change

The kinetic energy of a rotating **Generating Unit** and its prime mover is given by the equation

$$K = 5.48 \times 10^{-6} \times J \times N^2 \qquad \text{equation 1}$$

where K = kinetic energy in kJ

J = moment of inertia in kgm^2

N = machine in speed in rpm

From equation 1, the inertia constant (H) of the machine can be calculated using the expression,

$$H = \frac{K^1}{G} \qquad \text{equation 2}$$

Where K^1 = Kinetic energy at rated speed and frequency (F_r)

Formatted: Space After: 2 pt

G = kVA capacity of the **Generating Unit**

Hence at any frequency, F, the kinetic energy, K, can be expressed as

$$K = \left(\frac{F}{F_r}\right)^2 \times H \times G \qquad \text{equation 3}$$

Now the immediate effect of any change in the power, P_C, being supplied by the **Generating Unit** is to initiate a change in the kinetic energy of the machine. In fact P_C is the differential of the kinetic energy with respect to time, thus

$$P_c = \frac{dK}{dt} \qquad \text{equation 4}$$

Rewriting

$$P_c = \frac{dK}{dF} \times \frac{dF}{dt} \qquad \text{equation 5}$$

Differentiating equation 3 gives

$$\frac{dK}{dF} = \frac{2FHG}{F_r^2} \qquad \text{equation 6}$$

Substituting in equation 5

$$P_c = \frac{2FHG}{F_r^2} \times \frac{dF}{dt}$$

Re-arranging

$$\frac{dF}{dt} = \frac{P_c F_r^2}{2HGF} \qquad \text{equation 7}$$

Worked Example

Consider a 200kW generator where 100% of the load is suddenly applied. The resulting rate of change of frequency can be calculated from equation 7 above. It is necessary to evaluate the kinetic energy at rated speed and frequency from equation 1.

Now J = moment of inertia = 80kgm^2; and

N = 750 rpm

Hence K = HG = 5.48 x 10^{-6} x 80 x 750^2

= 247 kJ

Section 13.7

Formatted: Right

Therefore $\frac{dF}{dt} = \frac{200 \times 50^2}{2 \times 247 \times 52.5} = 19.3$ Hz s^{-1}

Formatted: Space After: 2 pt

13.7.3 Assessment of Practical Results -

Island Mode

The diagram below shows an example of generator types 1, 2, and 3 connected to a common high fault level **DNO** network busbar. In each case the **Generating Unit** is rated at approximately 2.5MVA with parameters typical for these types of generator. They are each supplying 2MW at unity power factor at the busbar after power factor correction (Gen types 2 and 3). For the DFIG an operating point of -5% slip is assumed (some energy is then exported through the voltage sourced converters via the rotor). Voltage is in per unit; voltage angle in degrees; frequency change is in per unit (1pu = 50Hz).

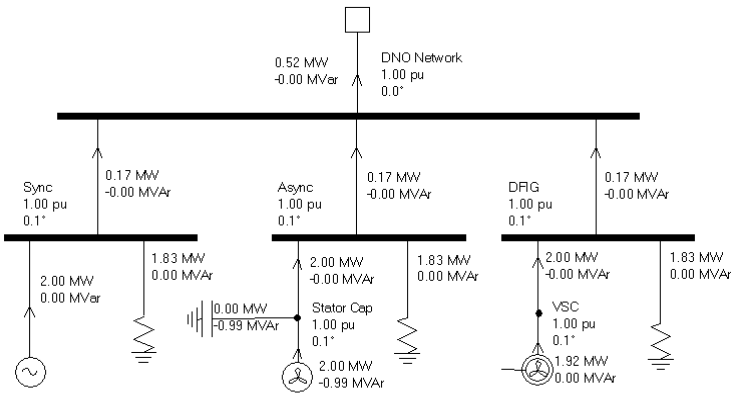

Figure 1 - Three Generator types

Transient Study

At t=0.1 seconds the network connections are broken leaving each generator in an islanded condition supplying 90% of it's original load. Each type of generator will behave differently depending on its inertia constant and its electrical characteristics.

The following three figures show how each performs in the first couple of seconds. This assumes that no internal protection or control systems intervene and any fault ride through system is inactive.

Section 13.7

Formatted: Right

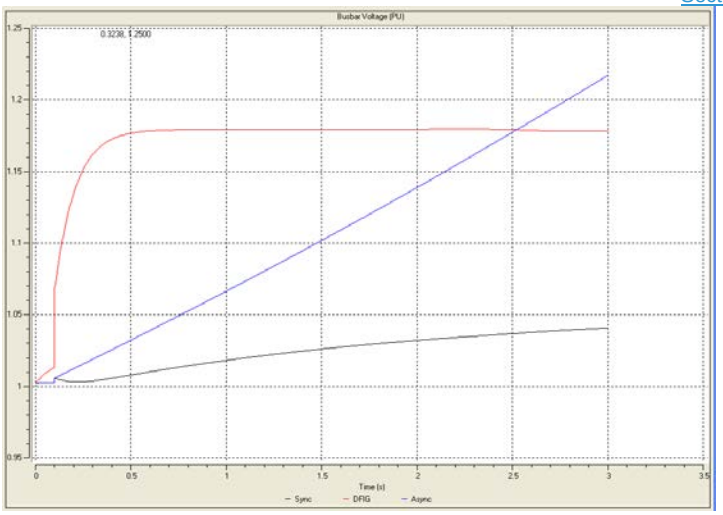

Figure 2 - Voltage Profile

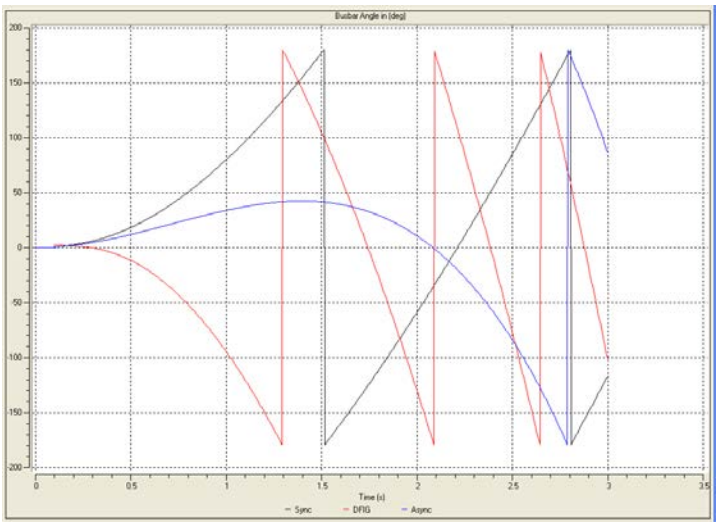

Figure 3 Voltage Angle (flips at +/- 180 Deg)

Note that it shows:

Synchronous Generator**:** Speed Increase, slow voltage rise

Asynchronous Generator: Initial increase then fall (as voltage climbs)

DFIG Generator**:** Speed Decreasing (as terminal voltage has jumped up)

Formatted: Space After: 2 pt

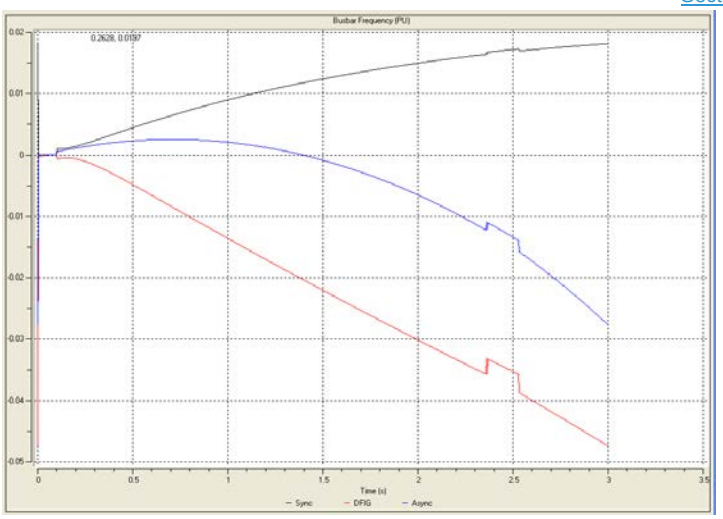

Figure 4 Voltage Frequency Change (PU)

Results

Considering the settings in 10.5.7.1 with a K1 and K2=1

Prot Function	**Small Power Station**			
	LV Connected		**HV** Connected	
	Setting	Time	Setting	Time
LoM (Vector Shift)	K1 x 6 degrees		K1 x 6 degrees#	
LoM (RoCoF)	K2 x 0.125 Hz s^{-1}		K2 x 0.125 Hz s^{-1} #	

From inspection of the above graphs the following detection (pick up) times would have resulted:-

Prot Function	**Generator Type**		
	Synchronous	**Asynchronous**	**DFIG**
	Pick Up Time	Pick Up Time	Pick Up Time
LoM (Vector Shift)	0.20 s	0.23 s	0.32 s
LoM (RoCoF)	0.22 s	0.36 s	0.24 s

Actual tripping time would be determined by the relay sampling method

Section 13.7

Formatted: Right

Circuit Impedance Change – High to Low Fault Level

The diagram below shows an example of same generator types 1, 2, and 3 connected to a common high fault level **DNO** network busbar. In this case each is connected via a low (Z) and a high impedance circuit (10 x Z). All three export 2MW at unity pf, primarily via the low impedance circuit. However should the low impedance circuit fault, the generation remains connected via the high impedance circuit.

In this scenario, the low Z circuit trips at 0.1 seconds and we see the machine responses to the sudden impedance change. As before, voltage is in per unit; voltage angle in degrees; frequency change is in per unit (1pu=50Hz).

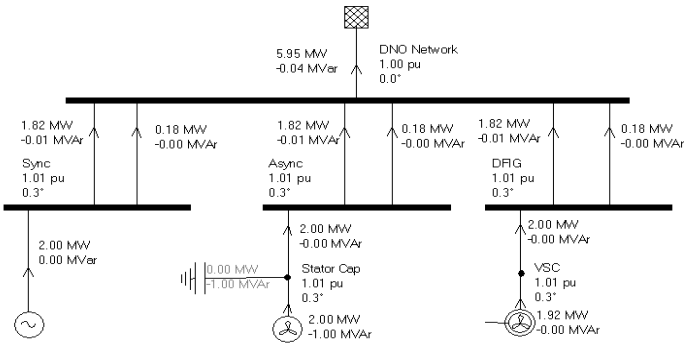

Figure 5 - Impedance Step Change Network

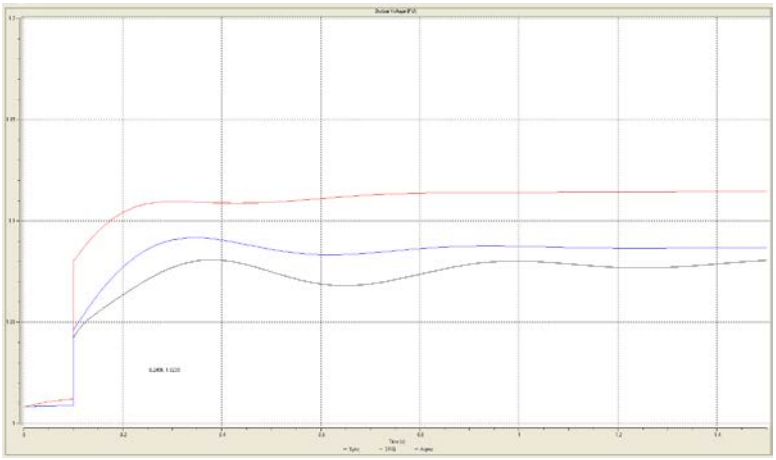

Figure 6 - Voltage Response

Formatted: Space After: 2 pt

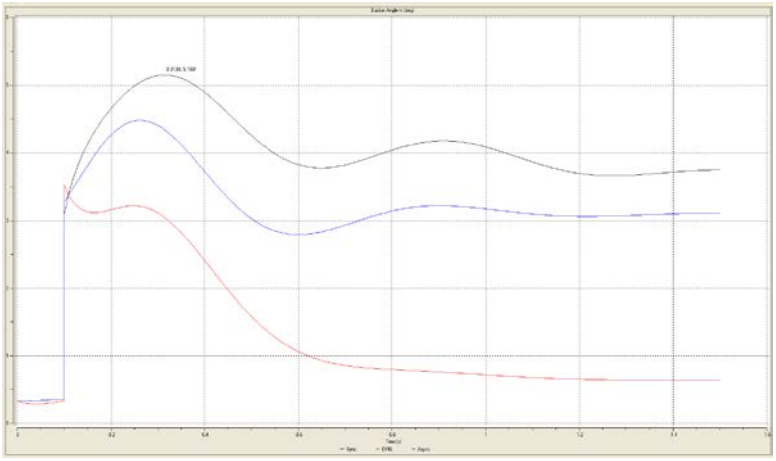

Figure 7 - Voltage Angle

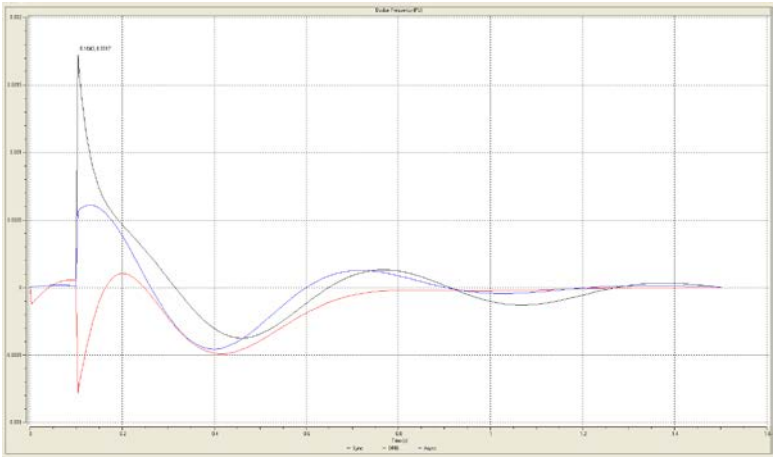

Figure 8 - Voltage Frequency Change (PU)

Results

Considering the settings in 10.5.7.1 with a K1 and K2=1

Prot Function	Small Power Station			
	LV Connected		**HV** Connected	
	Setting	Time	Setting	Time
LoM (Vector Shift)	K1 x 6 degrees		K1 x 6 degrees#	
LoM (RoCoF)	K2 x 0.125 Hz s^{-1}		K2 x 0.125 Hz s^{-1} #	

Section 13.7

Formatted: Right

From inspection of the above graphs the following detection (pick up) times would have resulted:-

Prot Function	Generator Type		
	Synchronous	**Asynchronous**	**DFIG**
	Pick Up Time	Pick Up Time	Pick Up Time
LoM (Vector Shift)	No Trip (5.15 Deg)	No Trip (4.5 Deg)	No Trip (3.5 Deg)
LoM (RoCoF)	No Trip (0.085 Hz s^{-1})	No Trip (0.03 Hz s^{-1})	No Trip (0.04 Hz s^{-1})

Actual tripping time would be determined by the relay sampling method, and in this case, it is highly unlikely that the RoCoF relay would have acted as the change in frequency was transient and oscillatory.

It can also be seen that the vector shift relay was quite close to pick-up, and there will be circumstances where the K factor will need to be raised to prevent mal-operation. Note that no further vector shift protection will be allowed for Generating Units commissioned after ~~01 March 2018~~01 Feb 2018

On the voltage response graph for the DFIG Generator would indicate that it would have exceeded the over voltage protection setting (+10%) after 1 second and tripped.

Formatted: Space After: 2 pt

13.8 Type Testing of Generation Units of 50kW three phase, or 17kW per phase or less. Guidance for Manufacturers.

EREC G59/3 makes provision for **Manufacturers** to **Type Test Generating Unit**s of up to 50kW or 17kW per phase. This section gives guidance to **Manufacture**s on how to do this. The results should be recorded on a copy of the **Generating Unit Type Test** declaration which is shown as Appendix 13.1 of this document..

The philosophy behind this testing matches that for the testing of smaller **Generating Unit**s in EREC G83, however in EREC G83 such equipment is called **Generators.** There are sections for **Inverter** connected **Generating Units** and directly connected **Generating Units** followed by a section giving details on specific requirements for different technology types.

In order to preserve commonality between EREC G59 and EREC G83 the numbering of this section will contain a EREC G59 document reference number followed by the equivalent reference(s) from EREC G83 in brackets.

For example **13.8.1 (A1.1,B1.1)** covers both Annex A section 1.1 and Annex B section 1.1 in EREC G83/2 Where these are different then only one reference will be shown.

Normally **Manufacturer**s will only need to provide **Type Test** declarations for **Generating Units** of less than 16A per phase to EREC G83~~/2~~ and these units can be used in **Power Station**s of up to 50kW three phase or 17kW per phase. However they may chose to provide Type Test Declarations to EREC G59/3 as well as to EREC G83~~/2~~ which will allow multiple **Generating Units** to be used in installations above 50kW three phase or 17kW per phase.

13.8.1 (A1.1,B1.1) General Arrangements

This Annex describes a methodology for obtaining type certification or type verification for the interface equipment between the **Inverter** connected **Generating Unit** and the **Distribution Network System**. Typically, all interface functions are contained within the **Inverter** and in such cases it is only necessary to have the Inverter Type Tested**.** Alternatively, a package of specific separate parts of equivalent function may also be **Type Tested**.

Other Annexes containing **Inverter** connected equipment may make reference to the requirements specified in this Annex.

Alternatively, a package of specific separate parts of equivalent function may also be **Type Tested** but the completed **Generating Unit's Interface Protection** must not rely on interconnection using cables which could be terminated incorrectly on site ie the interconnections must be made by plug and socket which the **Manufacturer** has made and tested prior to delivery to site. See section 10.2.5.d)

Note 1: This Appendix is primarily designed for the testing of three phase **Generating Units**. However, where practicable, a single phase, or split phase test may be carried out if it can be shown that it will produce the equivalent results.

Note 2: This Appendix applies for **Generating Units** either with or without load management or energy storage systems which are connected

Section 13.8

Formatted: Right

on the **Generating Unit** side of the **Inverter**.

13.8.2 (A1.2,B1.2) CE Marking and Certification

The type verification procedure requires that the **Generating Unit** interface be certified to the relevant requirements of the applicable Directives before the **Generating Unit** can be labelled with a CE mark. Where the protection control is to be provided as a separate device, this must also be **Type Tested** and certified to the relevant requirements of the applicable Directives before it can be labeled with a CE mark.

The **Generating Unit**'s **Interface Protection** shall satisfy the requirements of all of the following standards. Where these standards have more than one part, the requirements of all such parts shall be satisfied, so far as they are applicable.

BS EN 61000 (Electromagnetic Standards)
BS EN 60255 (Electrical Relays)
BS EN 61810 (Electrical Elementary Relays)
BS EN 60947 (Low Voltage Switchgear and Control gear)
BS EN 60044 (Instrument Transformers)

Currently there are no harmonised functional standards that apply to the **Generating Unit**'s **Interface Protection**. Consequently, in cases where power electronics is used for energy conversion along with any separate **Interface Protection** unit they will need to be brought together and tested as a complete **Generating Unit** as described in this Appendix, and recorded in format similar to that shown in Appendix 13.1. Where the **Interface Protection** is physically integrated within the overall **Generating Unit** control system, the functionality of the **Interface Protection** unit should not be compromised by any failure of other elements of the control system (fail safe).

13.8.3 (A1.3,B1,3) Type Verification Functional Testing of the Interface Protection

Type Testing is the responsibility of the **Manufacturer**. This test will verify that the operation of the **Generating Unit Interface Protection** shall result:

a) in the safe disconnection of the **Generating Unit** from the **DNO's Distribution System** in the event that the protection settings specified in table 10.5.7.1 are exceeded; and

b) in the **Generating Unit** remaining connected to the **DNO's Distribution System** while network conditions are:

Formatted: Left

(1) within the envelope specified by the settings plus and minus the tolerances specified for equipment operation in table 10.5.7.1; and

(2) within the trip delay settings specified in table 10.5.7.1.

The **Type Testing** can be done by the **Manufacturer** of an individual component, by an external test house, or by the supplier of the complete

Formatted: Space After: 2 pt

system, or any combination of them as appropriate.

Wherever possible the **Type Testing** of an **Inverter** designed for a particular type of **Generating Unit** should be proved under normal conditions of operation for that technology (unless otherwise noted).

This will require that the chosen **Generating Unit Interface Protection** is either already incorporated into the **Inverter** or that the discrete device is connected to the **Inverter** for the loss of mains protection test. Testing the voltage and frequency functions may be carried out on the discrete protection device independently or on the **Inverter** complete.

In either case it will be necessary to verify that a protection operation will disconnect the **Generator** from the **DNO's Distribution System**.

13.8.3.1 (A1.3.1,B1.3.1) Disconnection times

The minimum trip delay settings, for tests in 13.8.3.2, 13.8.3.3 and 13.8.3.4, are presented in table 10.5.7.1.

Reconnection shall be checked as detailed in 13.8.3.5 below.

In some systems it may be safer and more convenient to test the trip delay time and the disconnection time separately. This will allow the trip delay time to be measured in a test environment (in a similar way as you could test a protection relay). The disconnection time can be measured in the **Generating Unit**s normal operation, allowing accurate measurement with correct inertia and prime mover characteristics. This is permitted providing the total disconnection time does not exceed the trip delay time plus 0.5s. When measuring the shutdown time, 5 shutdowns should be initiated, and the average time recorded.

13.8.3.2 (A1.3.2,B1.3.2) Over / Under Voltage

The **Generating Unit** shall be tested by operating the **Generating Unit** in parallel with a variable **AC** test supply, see figure A2. Correct protection and ride-through operation shall be confirmed during operation of the **Generating Unit.** The set points for over and under voltage at which the **Generating Unit** disconnects from the supply will be established by varying the **AC** supply voltage.

To establish a trip voltage, the test voltage should be applied in steps of ± 0.5% or less, of the nominal voltage for a duration that is longer than the trip time delay, for example 1 second in the case of a delay setting of 0.5s starting at least 4V below or above the setting. The test voltage at which this trip occurred is to be recorded. Additional tests just above and below the trip voltage should be undertaken to show that the test is repeatable and the figure at which a repeatable trip occurs should be recorded on the **Type Test** declaration Appendix 13.1.

To establish the trip time, the test voltage should be applied starting from 4V below or above the recorded trip voltage and should be changed to 4V above or below the recorded trip voltage in a single step. The time taken from the step change to the **Generating Unit** tripping is to be recorded on the **Type Test** declaration Appendix 13.1.

Section 13.3

Formatted: Right

To establish correct ride-through operation, the test voltage should be applied at each setting ±4V and for the relevant times shown in the table in section 13.1

For example to test overvoltage setting stage 1 which is required to be set at 262.2V the circuit should be set up as shown below and the voltage adjusted to 254.2V. The **Inverter** should then be powered up to export a measureable amount of energy so that it can be confirmed that the **Inverter** has ceased to output energy. The variable voltage supply is then increased in steps of no more than 0.5% of nominal (1.15V) maintaining the voltage for at least 1.5s (trip time plus 0.5s) at each voltage level. At each voltage level confirmation that the **Inverter** has not tripped after the time delay is required to be taken. At the voltage level at which a trip occurs then this should be recorded as the provisional trip voltage. Additional tests just below and if necessary just above the provisional trip voltage will allow the actual trip voltage to be established on a repeatable basis. This value should be recorded. For the sake of this example the actual trip level is assumed to have been established as been 255V. The variable voltage supply should be set to 251V the **Inverter** set to produce a measureable output and then the voltage raised to 259V in a single step. The time from the step change to the output of **Inverter** falling to zero should be recorded as the trip time.

The **Inverter** then needs to operate at 4V below the nominal overvoltage stage 1 setting which is 258.2V for a period of at least 2s without tripping and while producing a measurable output. This can be confirmed as a no trip in the relevant part of section 13.1. The voltage then needs to be stepped up to the next level of 269.7V for a period of 0.98s and then back to 258.2V during which time the output of the relay should continue with no interruption though it may change due to the change in voltage, this can be recorded as a no trip for the second value. The step up and step down test needs to be done a second time with a max value of 277.7V and with a time of 0.48s. The **Inverter** is allowed to shut down during this period to protect its self as allowed by note $ of Table 10.5.7.1 of EREC G59/3, but it must resume production again when the voltage has been restored to 258.2V or it may continue to produce an output during this period. There is no defined time for resumption of production but it must be shown that the restart timer has not operated so it must begin producing again in less than 20s.

The “No-trip tests” need to be carried out at the relevant values and times as shown in the tables in 13.1 to ensure that the protection will not trip in error.

Note that this philosophy should be also be applied to the under voltage tests and to the over and under frequency, RoCoF and Vector shift stability tests which follow in sections 13.8.3.2, 13.8.3.3, 13.8.3.4A and 13.8.3.4B

Figure A2. Generator Test set up – Over / Under Voltage

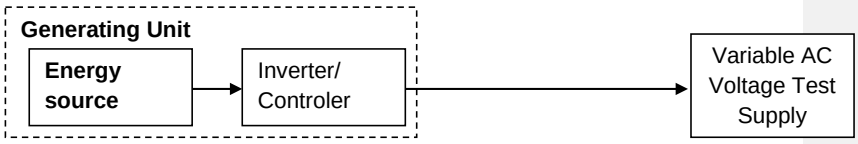

Formatted: Space After: 2 pt

13.8.3.3(A1.3. 3,B1.3.3) Over / Under Frequency

The **Generating Unit** shall be tested by operating it in parallel with a low impedance, variable frequency test supply system, see figure A3. Correct protection and ride-through operation should be confirmed during operation of the **Generating Unit**. The set points for over and under frequency at which the **Generating Unit** disconnects from the supply will be established by varying the test supply frequency.

To establish a trip frequency, the test frequency should be applied in a slow ramp rate of less than 0.1 Hzs^{-1}, or if this is not possible in steps of 0.05Hz for a duration that is longer than the trip time delay, for example 1s in the case of a delay setting of 0.5s. The test frequency at which this trip occurred is to be recorded. Additional tests just above and below the trip frequency should be undertaken to show that the test is repeatable and the figure at which a repeatable trip occurs should be recorded on the **Type Test** declaration Appendix 13.1.

To establish the trip time, the test frequency should be applied starting from 0.3Hz below or above the recorded trip frequency and should be changed to 0.3Hz above or below the recorded trip frequency in a single step. The time taken from the step change to the **Generating Unit** tripping is to be recorded on the **Type Test** declaration section 13.1. It should be noted that with some loss of mains detection techniques this test may result in a faster trip due to operation of the loss of mains protection. There are two ways around this. Firstly the loss of mains protection may be able to be turned off in order to carry out this test. Secondly by establishing an accurate frequency for the trip a much smaller step change could be used to initiate the trip and establish a trip time. This may require the test to be repeated several times to establish that the time delay is correct.

To establish correct ride-through operation, the test frequency should be applied at each setting plus or minus 0.2Hz and for the relevant times shown in Appendix 13.1

Figure A3 Generator Test set up – Over / Under Frequency

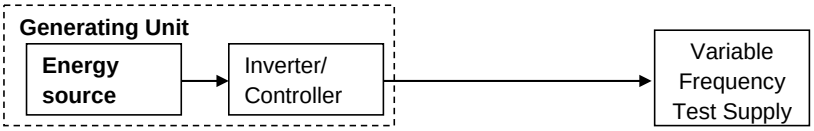

Section 13.8

Formatted: Right

Formatted: Right: 0.66 cm, Keep with next

13.8.3.4A (A.3.4) Loss of Mains Protection, Inverter connected machines

The tests should be carried out in accordance with BS EN 62116 and a subset of results should be recorded as indicated in the Protection – Loss of Mains test section of the **Type Test** declaration Appendix 13.1.

For Multi phase **Generating Units** they should be operated at part load while connected to a network running at about 50Hz and one phase only shall be disconnected with no disturbance to the other phases. The Generating Unit should trip within 1 second. The test needs to be repeated with each phase disconnected in turn while the other two phases remain in operation and the results recorded in the Type Test declaration.

13.8.3.4B (B.3.4) Loss of Mains Protection, Directly connected machines

The resonant test circuit specified in this test has been designed to model the interaction of the directly coupled **Generator** under test with the local load including multiple directly coupled connected **Generator**s in parallel.

The directly coupled **Generating Unit** output shall be connected to a network combining a resonant circuit with a Q factor of >0.5 and a variable load. The value of the load is to match the directly coupled **Generating Unit** output. To facilitate the test for LoM there shall be a switch placed between the test load/directly coupled **Generating Unit** combination and the **DNO's Distribution System**, as shown below:

Figure B4 Generator Test set up - Loss of Mains

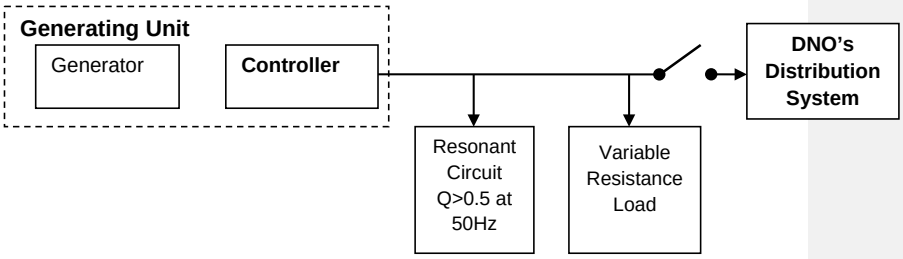

The directly coupled **Generating Unit** is to be tested at three levels of the

Formatted: Space After: 2 pt

directly coupled **Generating Units** output power: 10%, 55% and 100% and the results recorded on the **Type Test** declaration section 13.1. For each test the load match is to be within ± 5%. Each test is to be repeated five times.

Load match conditions are defined as being when the current from the directly coupled **Generating Unit** meets the requirements of the test load ie there is no export or import of supply frequency current to or from the **DNO**'s distribution system.

The tests will record the directly coupled **Generating Units** output voltage and frequency from at least 2 cycles before the switch is opened until the protection system operates and disconnects itself from the **DNO's Distribution System**, or for five seconds whichever is the lower duration.

The time from the switch opening until the protection disconnection occurs is to be measured and must comply with the requirements in table 10.5.7.1.

For Multi phase **Generating Units** they should be operated at part load while connected to a network running at about 50Hz and one phase only shall be disconnected with no disturbance to the other phases. The **Generating Unit** should trip within 1s. The test needs to be repeated with each phase disconnected in turn while the other two phases remain in operation and the results recorded in the **Type Test** declaration.

13.8.3.5 (A1.3.5,B1.3.5) Reconnection

Further tests will be carried out with the three test circuits above to check the **Inverter** time out feature prior to automatic network reconnection. This test will confirm that once the **AC** supply voltage and frequency have returned to be within the stage 1 settings specified in table 10.5.7.1 following an automatic protection trip operation there is a minimum time delay of 20s before the **Generating Unit** output is restored (ie before automatically reconnecting to the network).

13.8.3.6 (A1.3.6,B1.3.6) Frequency Drift and Step Change Stability test.

The tests will be carried out using the same circuit as specified in 13.8.3.3 above and following confirmation that the **Generating Unit** has passed the under and over frequency trip tests and the under and over frequency stability tests.

Four tests are required to be carried out with all protection functions enabled including loss of mains. For each stability test the **Generating Unit** should not trip during the test.

For the step change test the **Generating Unit** should be operated with a measureable output at the start frequency and then a vector shift should be applied by extending or reducing the time of a single cycle with subsequent cycles returning to the start frequency. The start frequency should then be maintained for a period of at least 10s to complete the test. The **Generating Unit** should not trip during this test.

For frequency drift tests the **Generating Unit** should be operated with a

Section 13.8

Formatted: Right

measureable output at the start frequency and then the frequency changed in a ramp function at 0.19Hz per second to the end frequency. On reaching the end frequency it should be maintained for a period of at least 10s. The **Generating Unit** should not trip during this test.

13.8.4 Power Quality

Formatted: Right: 0.05 cm, Keep with next

13.8.4.1 (A1.4.1,B1.4.1) Harmonics

The tests should be carried out as specified in BS EN 61000-3-12 and can be undertaken with a fixed source of energy at two power levels firstly between 45 and 55% and at 100% of maximum export capacity. The required supply minimum fault level should be recorded in the relevant part of **Type Test** declaration section 13.1. If the harmonics meet the technical requirements of BS EN 61000-3-2 then the relevant alternative part of the document can be completed and there will be no need to specify the minimum fault level required.

13.8.4.2 (A1.4.2,B1.4.2) Power Factor

The test set up shall be such that the **Generating Unit** supplies full load to the **DNO's Distribution System** via the power factor (pf) meter and the variac as shown below in figure A5. The **Generating Units** pf should be within the limits given in 9.3.7, for three test voltages 230 V –6%, 230V and 230 V +10%.

Figure A5 Generator Test set up – Power Factor

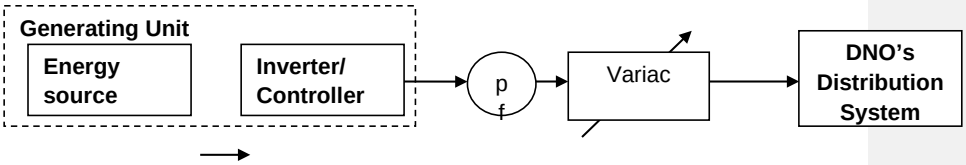

NOTE 1 For reasons of clarity the points of isolation are not shown.

NOTE 2: It is permissible to use a voltage regulator or tapped transformer to perform this test rather than a variac as shown.

13.8.4.3 (A1.4.3,B1.4.3) Voltage Flicker

Formatted: Space After: 2 pt

The voltage fluctuations and flicker emissions from the **Generating Unit** shall be measured in accordance with BS EN 61000-3-11 and technology specific annex. The required maximum supply impedance should be calculated and recorded in the **Type Test** declaration Appendix 13.1.

Where the **Generating Unit** meets the technical requirements of BS EN 61000-3-3 then this can be stated as an alternative and there is no need to specify the maximum supply impedance.

13.8.4.4 (A1.4.4,B1.4.4) DC Injection

The level of **DC** injection from the **Generating Unit** in to the **DNO's Distribution System** shall not exceed the levels specified in 9.6.4 when measured during operation at three levels, 10%, 55% and 100% of rating with a tolerance of ± 5% of the rating.

The DC injection requirements can be satisfied by the installation of an isolation transformer on the **AC** side of an **Inverter**-connected **Generating Unit**. A declaration that an isolating transformer is fitted can be made in lieu of the tests noted above.

13.8.4.5 (A1.4.5,B1.4.5) Over current Protection

Where appropriate the protection shall comply with the requirements of BS7671.

13.8.4.6A (A1.4.6) Short Circuit Current Contribution Inverter connected Generating Units

Inverter connected **Generating Units** generally have small short circuit fault contributions however **DNO**'s need to understand the contribution that they do make to system fault levels in order to determine that they can continue to safely operate without exceeding design fault levels for switchgear and other circuit components.

The following type tests shall be carried out and the results noted in the **Type Test** declaration Appendix 13.1.

Test circuit

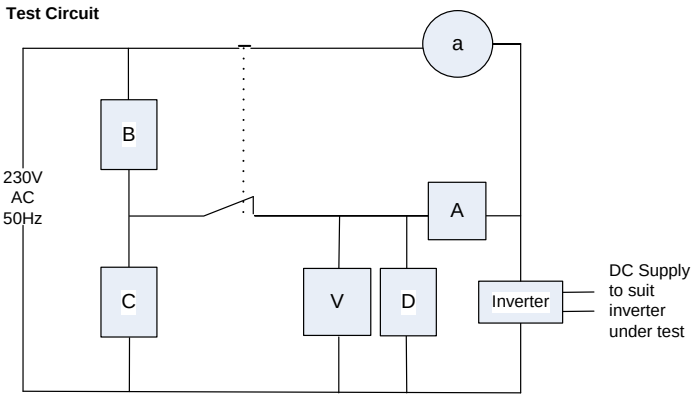

Formatted: Right

A and V are ammeters and voltmeters used to record the test data required. Component D is a resistive load plus resonant circuit as required for the loss of mains test as specified in BS EN 62116 set up to absorb 100% rated output of the **Inverter**, component a is an ammeter used to confirm that all the output from the **Inverter** is being absorbed by component D. Components B and C are set up to provide a voltage of between 10% and 15% of nominal when component C carries the rated output of the **Inverter**. Component C should be short term rated to carry the load which would appear through it should it be energised at 253V for at least 1s. Component B is to have an impedance of between 10 and 20 Ω per phase. If components B and C are short time rated than an additional switch in series with B and C can be inserted and arranged to be closed shortly before the main change over switch shown on the drawing and opened at the end of the test period. Components B and C are to have an X to R ratio of 2.5 to 1.

The test is carried out by setting up the **Inverter** and load D to produce and then absorb full rated output of the **Inverter**. When zero export is shown by ammeter "a" then the changeover switch shown is operated disconnecting the **Inverter** from the normal load and connecting it to the reduced voltage connection created by components B and C creating similar conditions to a network fault.

The values of voltage and current should be recorded for a period of up to 1 second when the changeover switch should be operated to the normal position. The voltage and current at relevant times shall be recorded in the type test report (Appendix 4) including the time taken for the **Inverter** to trip. (It is expected that the **Inverter** will trip on either loss of mains or under voltage in less than one second).

13.8.4.6B(B1.4.6) Short Circuit Current Contribution

DNO's need to understand the contribution a **Generating Unit** makes to system fault levels in order to determine that they can continue to safely operate without exceeding design fault levels for switchgear and other circuit components.

For rotating machines BS EN 60034-4:1995 Methods for determining synchronous machine quantities from tests should be used to establish the parameters required to be recorded in Appendix 13.1 under the section Fault Level Contribution.

For rotating machines and linear piston machines the test should produce a 0s – 2s plot of the short circuit current as seen at the **Generating Unit** terminals.

*Values for parameters marked in Appendix 13.1 should be provided where the short circuit duration is sufficiently long to enable interpolation of the plot.

13.8.4.7(A1.4.7) Self-Monitoring - Solid State Disconnection

Formatted: Space After: 2 pt

Some **Inverter**s include solid state switching devices to disconnect from the **DNO's Distribution System**. In this case 9.4.9 requires the control equipment to monitor the output stage of the **Inverter** to ensure that in the event of a protection initiated trip the output voltage is either disconnected completely or reduced to a value below 50V **AC**. This shall be verified either by self-certification by the **Manufacturer**, or additional material shall be presented to the tester sufficient to allow an assessment to be made.

13.8.4.8(A1.4.8,B1.4.7) Electromagnetic Compatibility (EMC)

All equipment shall comply with the generic EMC standards: BS EN61000-6-3: 2007 Electromagnetic Compatibility, Generic Emission Standard; and BS EN61000-6-1: 2007 Electromagnetic Compatibility, Generic Immunity Standard.

13.8.5 Separate Specific Technology Requirements

13.8.5.1(C1.1) Domestic CHP

For Domestic CHP **Generating Units** connected to the **DNO's Distribution System** the type verification testing and **Interface Protection** requirements will be as per the requirements defined in sections 13.8.1 to 13.8.4 inclusive.

Where appropriate the **Inverter** or directly connected **Generating Unit** clauses will apply.

13.8.5.2(C1.2) Photovoltaic

As all current Photovoltaic **Generation Units** will connect to the **DNO's Distribution System** via an **Inverter**, the type verification testing and **Interface Protection** requirements will be as per the requirements defined in sections 13.8.1 to 13.8.4 inclusive.

13.8.5.3(C1.3) Fuel Cells

As all current Fuel Cell **Generation Unit**s will connect to the **DNO's Distribution System** via an **Inverter**, the type verification testing and **Interface Protection** requirements will be as per the requirements defined in sections 13.8.1 to 13.8.4 inclusive.

13.8.5.4(C1.4) Hydro

Hydro can be connected to the **DNO's Distribution System** directly using induction or synchronous generators or it can be connected by an **Inverter**.

The type verification testing and **Interface Protection** requirements will be as per the requirements defined in sections 13.8.1 to 13.8.4 inclusive.

Where appropriate the **Inverter** or directly connected generator clauses will apply.

In addition the following needs to be taken into consideration.

Generating Units with manually fixed output or where the output is fixed by controlling the water flow through the turbine to a steady rate, need to comply

Formatted: Right

with the maximum voltage change requirements of BS EN 61000-3-11 or to the technical requirements of BS EN 61000-3-3 but do not need to be tested for P_{st} or P_{lt}.

Generating Units where the output is controlled by varying the load on the generator using the **Inverter** and which therefore produces variable output need to comply with the maximum voltage change requirements of BS EN 61000-3-11 or the technical requirements of BS EN 61000-3-3 and also need to be tested for P_{st} and P_{lt} over a period where the range of flows varies over the design range of the turbine with a period of at least 2 hours at each step with there being 10 steps from min flow to maximum flow. P_{st} and P_{lt} values to recorded and normalised as per the method laid down in Appendix 13.1.

13.8.5.5(C1.5) Wind

Wind turbines can be connected to the **DNO's Distribution System** directly, typically using asynchronous induction generators, or using **Inverter**s.

The type verification testing and **Interface Protection** requirements will be as per the requirements defined in sections 13.8.1 to 13.8.4 inclusive.

Where appropriate the **Inverter** or directly connected generator clauses will apply

In addition, in either case, the note regarding wind turbine voltage flicker testing specified in 9.6.2.1 shall apply.

Note: For wind turbines, flicker testing should be carried out during the performance tests specified in IEC 61400-12. Flicker data should be recorded from wind speeds of $1ms^{-1}$ below cut-in to 1.5 times 85% of the rated power. The wind speed range should be divided into contiguous bins of $1ms^{-1}$ centred on multiples of $1ms^{-1}$. The dataset shall be considered complete when each bin includes a minimum of 10 minutes of sampled data.

13.8.5.6(C1.6) Energy Storage Device

Energy Storage Devices can be connected to the **DNO's Distribution System** directly or using **Inverter**s.

The type verification testing and **Interface Protection** requirements will be as per the requirements defined in sections 13.8.1 to 13.8.4 inclusive.

Where appropriate the **Inverter** or directly connected generator clauses will apply.

13.9 Main Statutory and other Obligations

This appendix summarises the main statutory and other obligations on **DNO**s, **Generator**s and **Users** in relation to the design and operation of primary and protection equipment associated with **Distribution Systems**.

The key driver on the **DNO** is to ensure that it can comply with its statutory duties, and its regulatory obligations, in protecting its network, and disconnecting the minimum amount of equipment when unsafe situations have developed, as well as preserving supplies to other customers.

A key consideration of **Generator**s and **User**s is similarly to ensure that they can comply with their statutory duties to protect their entire network and to disconnect relevant equipment when unsafe situations have developed.

Reference	Obligation	DNO	Generator	User
ESQCR Reg 3	Ensure equipment is sufficient for purpose and electrically protected to prevent danger, so far as is reasonably practicable.	X	X	-
ESQCR Reg 4	Disclose information and co-operate with each other to ensure compliance with the ESQC Regulations 2002	X	X	-
ESQCR Reg 6	Apply protective devices to their network, so far as is reasonably practicable, to prevent overcurrents from exceeding equipment ratings.	X	X	-
ESQC Reg 7	Ensure continuity of the neutral conductor and not introduce any protective device in the neutral conductor or earthing connection of **LV** networks.	X	X	-
ESQCR Reg 8	Connect the network to earth at or as near as reasonably practicable to the source of voltage; the earth connection need only be made at one point.	X	X	-
ESQCR Reg 11	Take all reasonable precautions to minimise the risk of fire from substation equipment.	X	X	-

Section 13.9

Formatted: Right

Reference	Obligation	DNO	Generator	User
ESQCR Reg 21	Ensure that switched alternative sources of energy to distribution networks cannot operate in parallel with those networks and that such equipment which is part of an **LV** consumer's installation complies with BS 7671.		X	X
ESQCR Reg 22	Not install or operate sources of energy in parallel with distribution networks unless there are: appropriate equipment, personnel and procedures to prevent danger, so far as is reasonably practicable; **LV** consumers' equipment complies with BS 7671; and specific requirements are agreed with the **DNO**.		X	X
ESQCR Reg 24	**DNO** equipment which is on a consumer's premises but not under the consumer's control is protected by a suitable fused cut-out or circuit breaker which is situated as close as reasonably practicable to the supply terminals, which is enclosed in a locked or sealed container.	X		
ESQCR Reg 25	Not give consent to making or altering of connections where there are reasonable grounds to believe that the consumer's installation does not comply with ESQCR / BS 7671 or, so far as is reasonably practicable, is not protected to prevent danger or interruption of supply.	X		
ESQCR Reg 27	Declare the number of phases, frequency and voltage of the supply and, save in exceptional circumstances, keep this within permitted variations.	X		
ESQCR Reg 28	Provide a written statement of the type and rating of protective devices.	X		
EAWR Reg 4	Construct systems including suitable protective devices that can handle the likely load and fault conditions.	X	X	X
EAWR Reg 5	Not put into service electrical equipment where it strength and capability may be exceeded in such a way as to pose a danger.	X	X	X

Reference	Obligation	DNO	Generator	User
EAWR Reg 11	Provide an efficient and suitably located means to protect against excess current that would otherwise result in danger.	X	X	X
MHSWR Reg 3	Carry out an assessment of risks to which employees are exposed to at work and risks to other persons not employed arising from the activities undertaken.	X	X	X
BS 7671	Provide protective devices to break overload/fault current in **LV** consumer installations before danger arises.			X
BS 7671	Take suitable precautions where a reduction in voltage, or loss and subsequent restoration of voltage, could cause danger.			X
Distribution Code DPC4.4.4	Incorporate protective devices in **Distribution System**s in accordance with the requirements of the ESQCR.	X	X	X
	Agree protection systems, operating times, discrimination and sensitivity at the ownership boundary.	X	X	X
	Normally provide back-up protection in case of circuit breaker failure on **HV** systems.	X	X	X
Distribution Code DPC6.3	User's equipment must be compatible with **DNO** standards and practices.		X	X
	Design protection systems that take into account auto-reclosing or sequential switching features on the **DNO** network.		X	X
	Be aware that **DNO** protection arrangements may cause disconnection of one or two phases only of a three phase supply.		X	X
Distribution Code DPC7.4.3	Co-ordinate protection of embedded **Generator** with **DNO** network and meet target clearance times		X	
	Agree protection settings at network ownership boundary in writing during the connection consultation process	X	X	

Section 13.9

Formatted: Right

Reference	Obligation	DNO	Generator	User
Distribution Code DPC7.4.4	**Generating Unit**s or **Power Stations** must withstand NPS loading incurred during clearance of a close-up phase to phase fault by system back-up protection		X	
Distribution Code DPC7.4.5	Agree transformer winding configuration and method of earthing with **DNO**		X	
Distribution Code DPC8.10	Assess the transient overvoltage effects at the network ownership boundary, where necessary.	X	X	

13.10 Example calculations to determine if unequal generation across different phases is acceptable or not.

13.10.1 A **Customer** installation might have 12kW of PV and a 3kW CHP plant. Due to the areas of roof available the PV plant comprises 2 by 4.5kW inverters and a 3kW inverter.

A The following connection would be deemed acceptable.

- Ph 1 4.5kW PV
- Ph 2 3kW PV plus 3kW CHP
- Ph 3 4.5kW PV

This would lead to

- 1.5kW imbalance with CHP at zero output
- 1.5kW imbalance with CHP and PV at maximum output
- 3kW imbalance with CHP at maximum output and PV at zero output.

All of which are below the 16A imbalance limit.

B The following alternative connection for the same plant would be deemed unacceptable

- Ph1 4.5kW PV plus 3kW CHP
- Ph 2 3kW PV
- Ph3 4.5kW PV

This is not acceptable as at full output Ph1 would have 4.5kW more output than Ph2 and this exceeds the 16A limit described above even though on an individual technology basis the limit of 16A is not exceeded.

13.10.2. If a **Customer** installation has a single technology installed which has **Generating Units** with different output patterns for example PV mounted on roofs facing different directions then they should be regarded separately

(For these cases the assumption is that in the morning the east roof would produce full output and the west roof zero output with the opposite in the afternoon. Whilst this might not be strictly true the simplification makes the calculations much simpler)

A The following connection would be deemed acceptable.

Section 13.10

Formatted: Right

- Ph 1 6kW east roof 6kW west roof
- Ph 2 6kW east roof 6kW west roof
- Ph 3 5kW east roof 5kW west roof

B The following alternative connection for the same plant would be deemed unacceptable.

- Ph1 12kW east roof
- Ph2 5kW east roof 5kW west roof
- Ph 3 12kW west roof

This is not acceptable as Ph 1 would produce more than Ph 3 in the morning and in the afternoon Ph 3 would produce more than Ph 1 in each case by a margin greater than 16A.

~~13.11 Guidance on Risk Assessment when using RoCoF LoM Protection for Power Stations in the 5MW to 50MW range~~

~~This procedure aims to provide guidance on assessing the risks to a **Generator's** plant and equipment where a **Generator** with synchronous **Generating Units** is considering the effect of applying higher RoCoF settings than 0.2Hzs[1]. It is based on analysis undertaken for the network licensees by Strathclyde Universtity[11].~~

~~13.11.1 The guidance in this section 13.11 relates to a new activity. Early experience may suggest there are more efficient or effective ways of assessing the risk. **DNOs** and **Generators** will be free to adapt this procedure to achieve the **Generators'** ends.~~

~~13.11.2 First determine whether the **Power Station** includes a synchronous **Generating Unit**. This type of **Generating Unit** is at risk from an out-of-phase reclosure on a **DNO's** network where the **DNO** employs auto-reclose or automatic restoration schemes and the loss of mains protection has failed to disconnect the **Generating Unit** before the supply is restored by the **DNO's** automatic equipment.~~

~~13.11.3 If all the synchronous **Generating Units** in a **Power Station** are operating with a fixed power factor then the chance of sustaining an island is low and the **Generator** may wish to consider that there is no need to take any further action though this does not eliminate the risk of an out-of-phase reclosure. If any synchronous **Generating Unit** is operating with voltage control then the risk of an out-of-phase reclosure is increased and the **Generator** is advised to continue with the risk assement process as described in sections 13.11.4 to 13.11.9 below.~~

~~13.11.4 When a **Generator** wishes to carry out a risk assessment the **DNO** will be able to provide an estimate of the net (ie taking into account as appropriate other Generating on that part of the network) potential trapped load. This can be in the form of a yearly profile, and possibly in the form of a load duration curve. It is possible that an island may form at more than one automatic switching point on the **DNO's** network and the **DNO** will be able to provide a profile or estimate of a profile for each. This will enable a quick assessment to be made as to the whether the mismatch between load and generation is so gross as to obviate further study. It is for the **Generator** to determine what a gross mismatch is depending on the **Generating Unit's** response to a change in real or reactive power. The **Generator** should be aware that the trapped load on a network can change over time, due to the connection or disconnection of load and or **Generating Plant,** hence the trapped load assessment may need to be carried out periodically.~~

~~[11] A. Dyśko, I. Abdulhadi, X. Li, C. Booth "Assessment of Risks Resulting from the Adjustment of ROCOF Based Loss of Mains Protection Settings – Phase I", Institute for Energy and Environment, Department of Electronic and Electrical Engineering, University of Strathclyde, Glasgow, June 2013.~~

~~A. Dyśko, D Tzelepis, C Booth "Assessment of Risks Resulting from the Adjustment of Vector Shift (VS) Based Loss of Mains Protection Settings Phase II", ibid.June 2017~~

Formatted: Font: 9 pt, Not Bold, Font color: Auto, (Asian) Chinese (PRC)

Section 13.11

Formatted: Right

~~13.11.5 **DNO**s will also be able to provide indicative fault rates for their network that lead to the tripping of the automatic switching points in 13.11.4 above.~~

~~13.11.6 **DNO**s will provide any known or expected likely topology changes to the network and a view of the effects of this on the data provided in 13.11.4 and 13.11.5~~

~~13.11.7 **DNO**s will also be able to provide the automatic switching times employed by any auto-reclose switchgear employed at switching points identified in 13.11.4. This will include any potential changes to automatic switching times that it might be possible to deploy to reduce the risk of out-of-phase reclosure. The DNO will need to consider any potential effect from network faults on customer service and system performance before agreeing to modifying automatic switching times.~~

~~13.11.8 DNOs will provide the information above and any other relevant information reasonably required within a reasonable time when requested by the Generator.~~

~~13.11.9 A key influence on the stability of any power island will be the short term, ie second by second, variation of the trapped load. The **DNO** will be able to provide either a generic variability of the load with typically 1s resolution data points, or at the **Generator**'s expense will be able to measure actual load variability for the network in question for some representative operating conditions.~~

~~13.11.10 Armed with the above information the **Generator** will be able to commission appropriate modelling to simulate the stability of the **Generator**'s plant when subject to an islanding condition and hence assess the risks associated with an out-of-phase reclosure incident. Where the **Generator** considers these risks to be too high, sensitivity analysis should enable them to identify the effectiveness of various remedial actions.~~